Read this before you do any electrical work on the car.

The VIGOR SRS includes a driver's side airbag, located in the steering wheel hub. In addition, the GS model has a front passenger's airbag located in the dashboard above the glove box. Information necessary to safely service the SRS is included in this Service Manual. Items marked with an asterisk (*) on the contents page include, or are located near, SRS components. Servicing, disassembling or replacing these items will require special precautions and tools, and should therefore be done by an authorized Acura dealer.

⚠WARNING

- **To avoid rendering the SRS inoperative, which could lead to personal injury or death in the event of a severe frontal collision, all maintenance must be performed by an authorized Acura dealer.**
- **Improper maintenance, including incorrect removal and installation of the SRS, could lead to personal injury caused by unintentional activation of the airbag (s).**
- **All SRS electrical wiring harnesses are covered with yellow outer insulation. Related components are located in the steering column, center console, dash, and dashboard lower panel, and in the dashboard above the glove box. Do not use electrical test equipment on these circuits.**

NOTE: The radio may have a coded theft protection circuit. Be sure to get the customer's code number before
– Disconnecting the battery.
– Removing the No. 39 (10 A) fuse in the under-hood fuse/relay box.
– Removing the radio.
After service, reconnect power to the radio and turn it on. When the word "CODE" is displayed, enter the customer's 5-digit code to restore radio operation.

Electrical

Special Tools 23-2
Troubleshooting
Tips and Precautions 23-3
Five-step Troubleshooting 23-5
How to Use This Section
Schematic Symbols 23-6
Wire Color Codes 23-6
Relay and Control Unit Locations
Engine Compartment 23-7
Dashboard 23-10
Seat 23-15
Trunk 23-16

Index to Circuits and Systems
Air Conditioning ..... Section 21
Anti-lock Brake System (ABS) ..... Section 19
Automatic Transmission System ..... Section 14
Battery 23-68
Blower Controls ..... Section 21
Charging System 23-110
*Cigarette Lighter 23-232
Clock 23-230
Connector Identification and Wire Harness Routing 23-17
*Cruise Control 23-290
Fuel Pump ..... Section 11
*Fuses 23-46
PGM-FI Control System ..... Section 11
*Gauges
Circuit Diagram 23-130
Engine Coolant Temperature (ECT) Gauge 23-141
Fuel Gauge 23-139
Speedometer 23-129
Tachometer 23-129
Grounds
Distribution 23-60
*Heater Controls ..... Section 21
*Horn 23-224
*Ignition Switch 23-73
Ignition System 23-98

*A/T Gear Position Indicator 23-174
*Safety Indicator 23-151
*Integrated Control Unit 23-164
*Interlock System 23-144
Lights, Exterior
Back-up Lights 23-200
Brake Lights 23-202
Daytime Running Lights (Canada) 23-176
Front Fog Light 23-175
Front Side Marker/Parking Lights 23-189
Headlights 23-198
License Plate Lights 23-191
Taillights 23-190
Lights, Interior
Ceiling Light 23-193
Courtesy Light 23-193
*Dash lights Brightness Controller 23-218
Rear Reading Light 23-193
Trunk Light 23-207
*Lighting System 23-172
Power Distribution 23-52
Power Door Locks 23-262
Power Mirrors 23-245
Power Relays 23-70
Power Seats 23-272
Power Windows 23-252
Moonroof 23-240
Radiator and Condenser Fan Controls 23-123
*Rear Window Defogger 23-235
Seat Heaters 23-276
*Side Marker/Turn Signal/Hazard Flasher System 23-208
Starting System 23-77
*Stereo Sound System 23-212
*Supplemental Restraint System (SRS) 23-323
*Under-dash Fuse/Relay Box 23-66
Vehicle Speed Sensor (VSS) 23-138
*Wiper/Washers 23-281
Wiring Diagrams 23-368

*Read SRS precautions on page 23-330, then install the short connector (s) on the airbag (s) before working in these areas.

Sect. 23 – Electrical

Special Tools

Ref. No.	Tool Number	Description	Qty.	Page Reference
①	KS-AHM-32-003	Digital Multimeter	1	23-329
②	07NAC-SR20100	Fuel Sender Wrench	1	23-140
③	07GAA-001000C	Antenna Nut Wrench	1	23-220
④*	07HAZ-SG00400	Deployment Tool	1	23-358
⑤**	07MAZ-SL00500	Test Harness A	1	23-339
⑥**	07MAZ-SP00500	Test Harness B	1	23-342
⑦*	07LAZ-SL40300	Test Harness C	1	23-343
⑧*	07LAZ-SL40400	Test Harness D	1	23-345

*: Included in SRS Tool Set 07MAZ-SM5000A
**: Included in SRS Tool Set 07MAZ-SL0010A

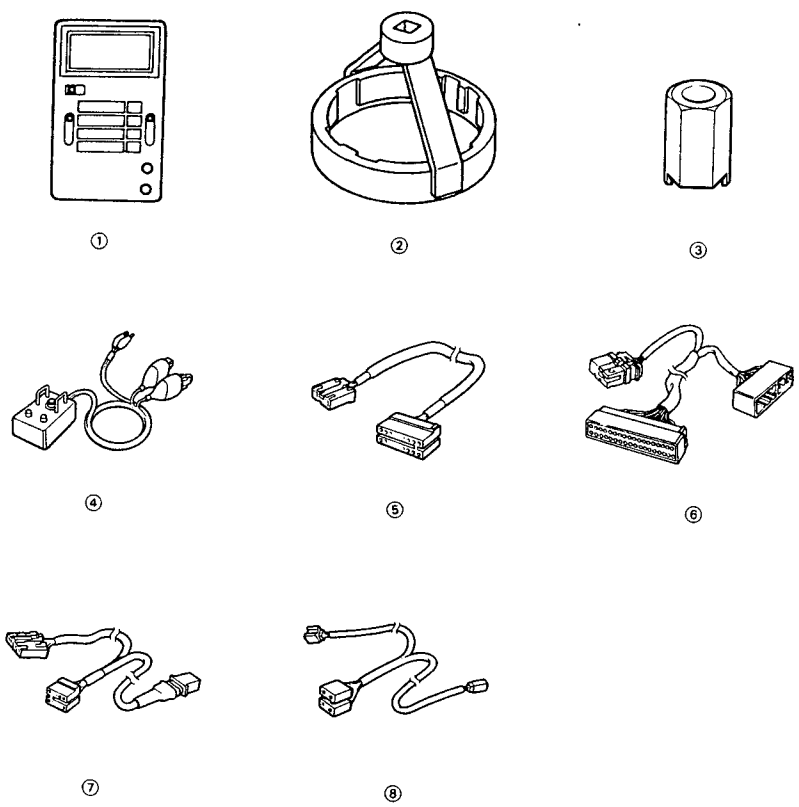

Troubleshooting

Tips and Precautions

Before Troubleshooting
- Check applicable fuses in the appropriate fuse/relay box.
- Check the battery for damage, state of charge, and clean and tight connections.
- Check the alternator belt tension.

CAUTION:
- **Do not quick-charge a battery unless the battery ground cable has been disconnected. Otherwise you will damage the alternator diodes.**
- **Do not attempt to crank the engine with the battery ground cable loosely connected or you will severely damage the wiring.**

Handling Connectors
- Make sure the connectors are clean and have no loose wire terminals.
- Make sure multiple cavity connectors are packed with grease (except watertight connectors).
- All connectors have push-down release type locks.

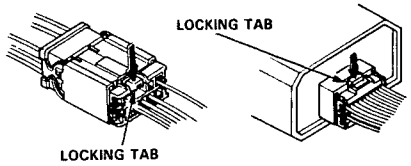

- Some connectors have a clip on their side used to attach them to a mount bracket on the body or on another component. This clip has a pull type lock.
- Some mounted connectors cannot be disconnected unless you first release the lock and remove the connector from its mount bracket.

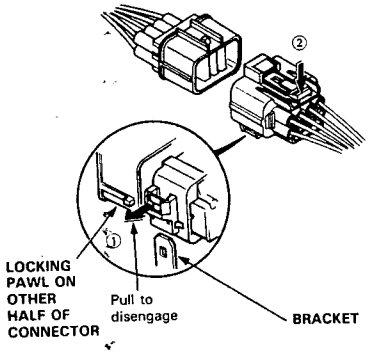

- Never try to disconnect connectors by pulling on their wires; pull on the connector halves instead.
- Always reinstall plastic covers.

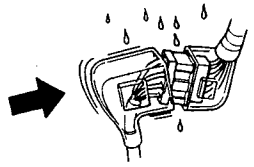

- Before connecting connectors, make sure the terminals are in place and not bent.

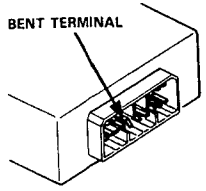

- Check for loose retainer and rubber seals.

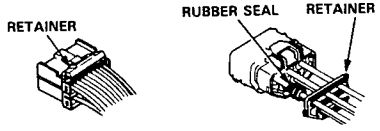

- The backs of some connectors are packed with grease. Add grease if necessary. If the grease is contaminated, replace it.

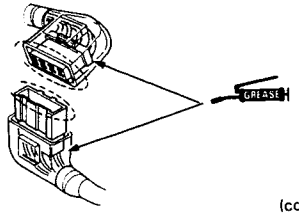

(cont'd)

Tips and Precautions (cont'd)

- Insert the connector all the way and make sure it is securely locked.
- Position wires so that the open end of the cover faces down.

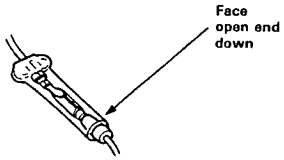

Handling Wires and Harnesses

- Secure wires and wire harnesses to the frame with their respective wire ties at the designated locations.
- Remove clips carefully; don't damage their locks.

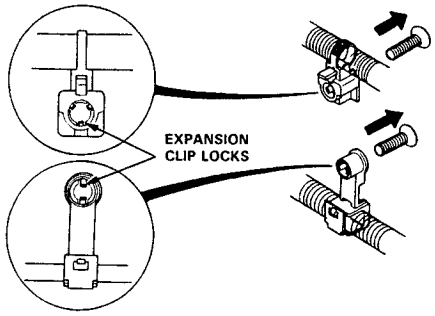

Slip pliers under the clip base and through the hole at an angle, then squeeze the expansion tabs to release the clip.

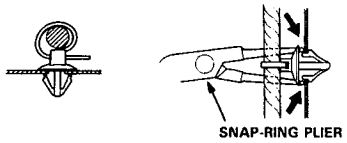

- After installing harness clips, make sure the harness doesn't interfere with any moving parts.
- Keep wire harnesses away from exhaust pipes and other hot parts, from sharp edges of brackets and holes, and from exposed screws and bolts.

- Seat grommets in their grooves properly.

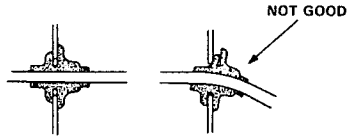

Testing and Repairs

- Do not use wires or harnesses with broken insulation. Replace them or repair them by wrapping the break with electrical tape.
- After installing parts, make sure that no wires are pinched under them.
- When using electrical test equipment, follow the manufacturer's instructions and those described in this manual.
- If possible, insert the probe of the tester from the wire side (except waterproof connector).

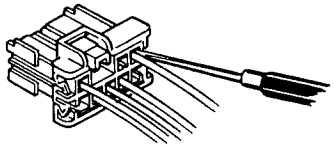

- Use a probe with a tapered tip.

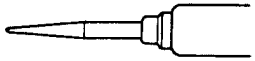

- Refer to the instructions in the Honda Terminal Pin Repair Kit for identification and replacement of connector terminals.

Five-step Troubleshooting

1. Verify The Complaint
   Turn on all the components in the problem circuit to verify the customer complaint. Note the symptoms. Do not begin disassembly or testing until you have narrowed down the problem area.

2. Analyze The Schematic
   Look up the schematic for the problem circuit. Determine how the circuit is supposed to work by tracing the current paths from the power feed through the circuit components to ground. If several circuits fail at the same time, the fuse or ground is a likely cause.

   Based on the symptoms and your understanding of the circuit operation, identify one or more possible causes of the problem.

3. Isolate The Problem By Testing The Circuit
   Make circuit tests to check the diagnosis you made in step 2. Keep in mind that a logical, simple procedure is the key to efficient troubleshooting. Test for the most likely cause of failure first. Try to make tests at points that are easily accessible.

4. Fix The Problem
   Once the specific problem is identified, make the repair. Be sure to use proper tools and safe procedures.

5. Make Sure The Circuit Works
   Turn on all components in the repaired circuit in all modes to make sure you've fixed the entire problem. If the problem was a blown fuse, be sure to test all of the circuits on the fuse. Make sure no new problems turn up and the original problem does not recur.

How to Use This Section

Schematic Symbols

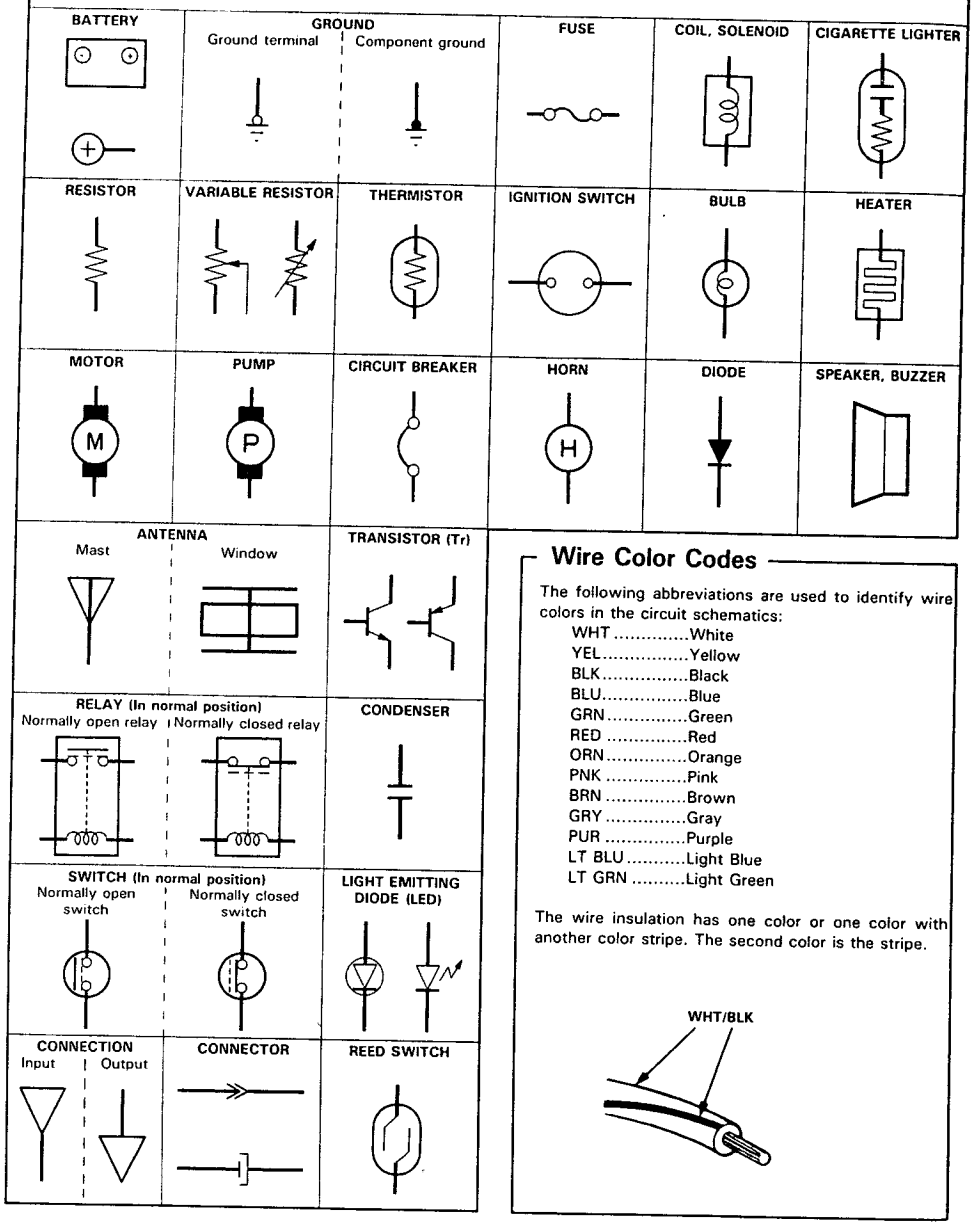

Wire Color Codes

The following abbreviations are used to identify wire colors in the circuit schematics:

WHT .....White
YEL.....Yellow
BLK.....Black
BLU.....Blue
GRN.....Green
RED .....Red
ORN.....Orange
PNK .....Pink
BRN .....Brown
GRY .....Gray
PUR .....Purple
LT BLU.....Light Blue
LT GRN .....Light Green

The wire insulation has one color or one color with another color stripe. The second color is the stripe.

Relay and Control Unit Locations

Engine Compartment

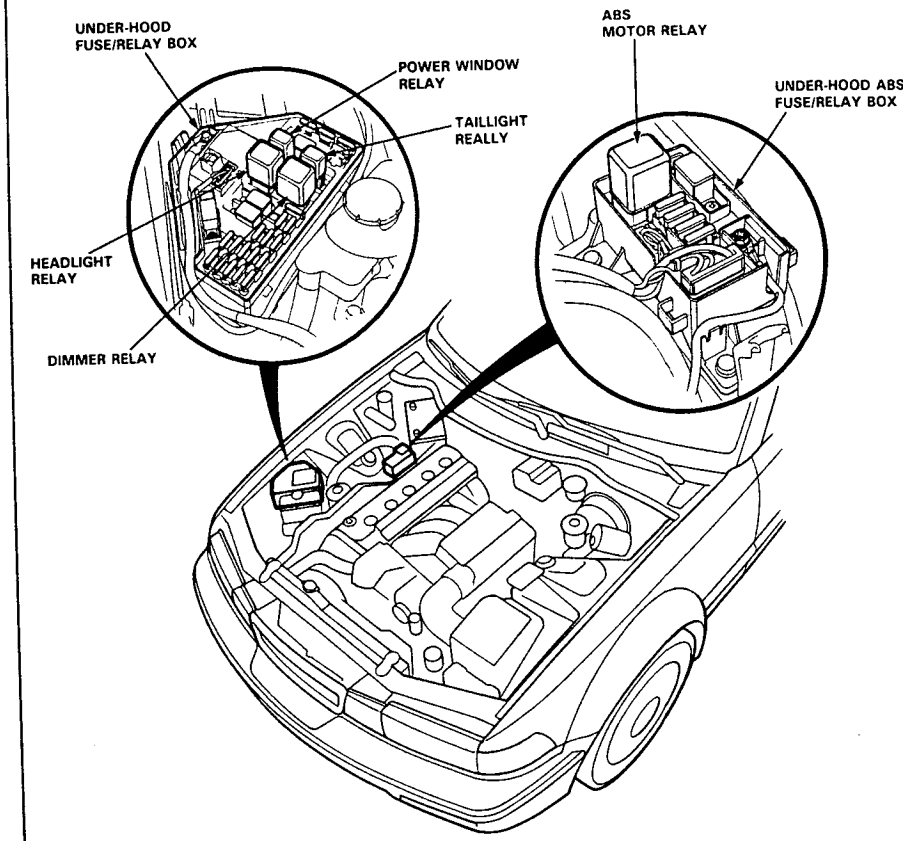

(co

Relay and Control Unit Locations

Engine Compartment (cont'd)

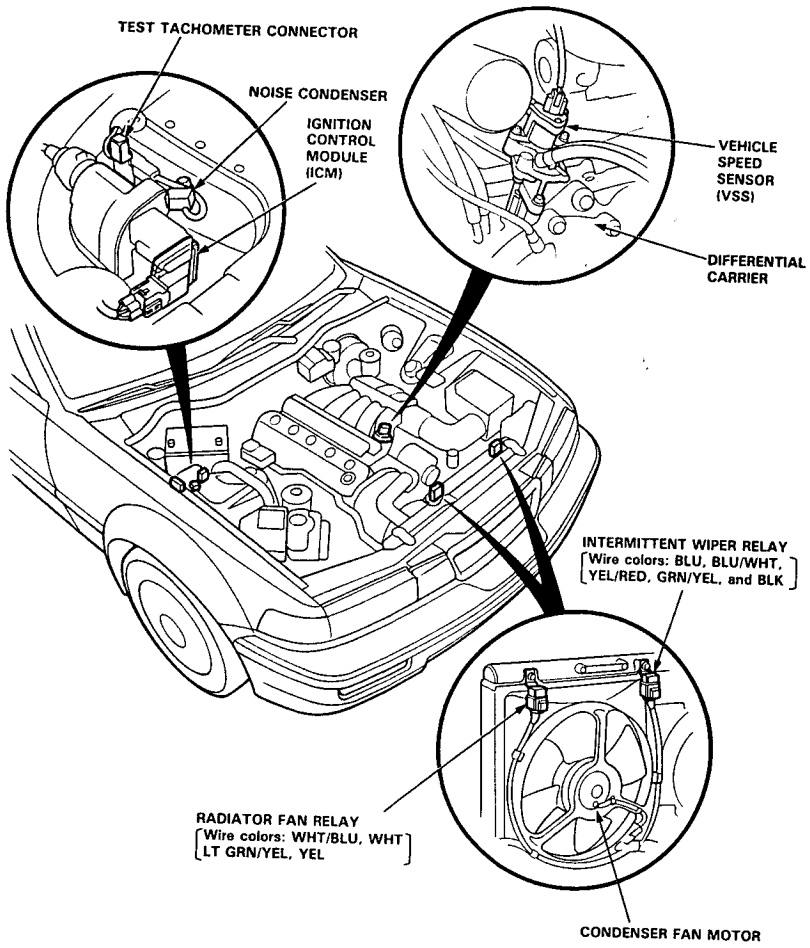

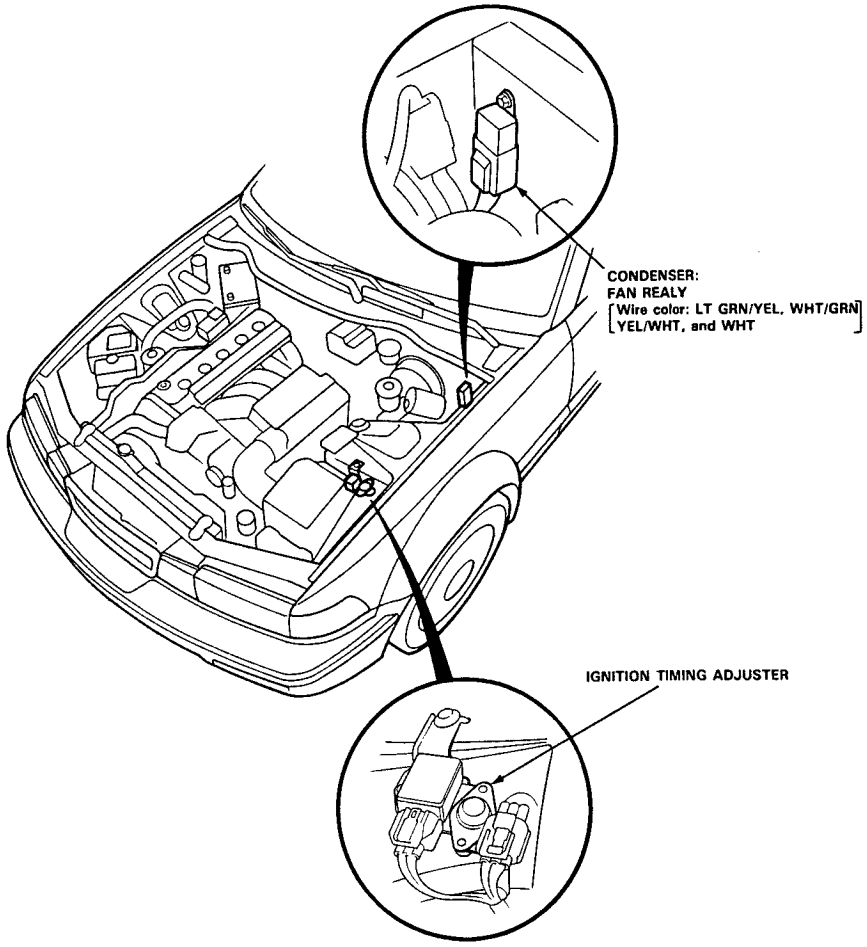

Relay and Control Unit Locations

Dashboard

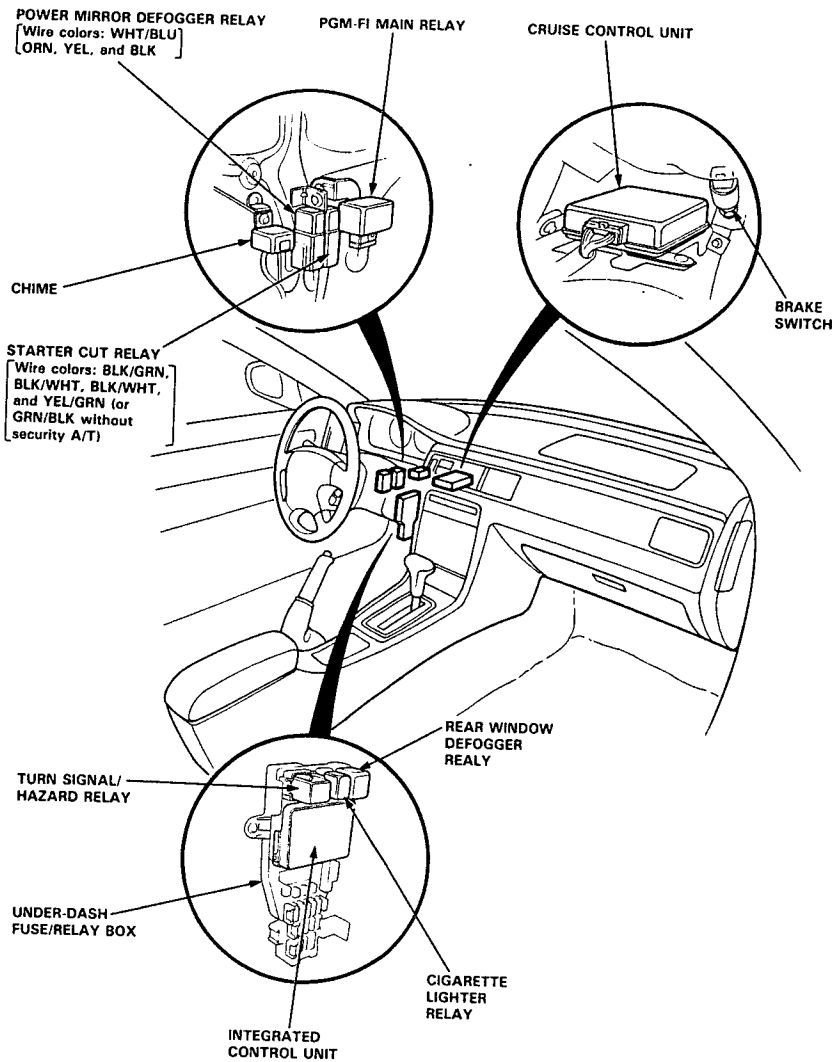

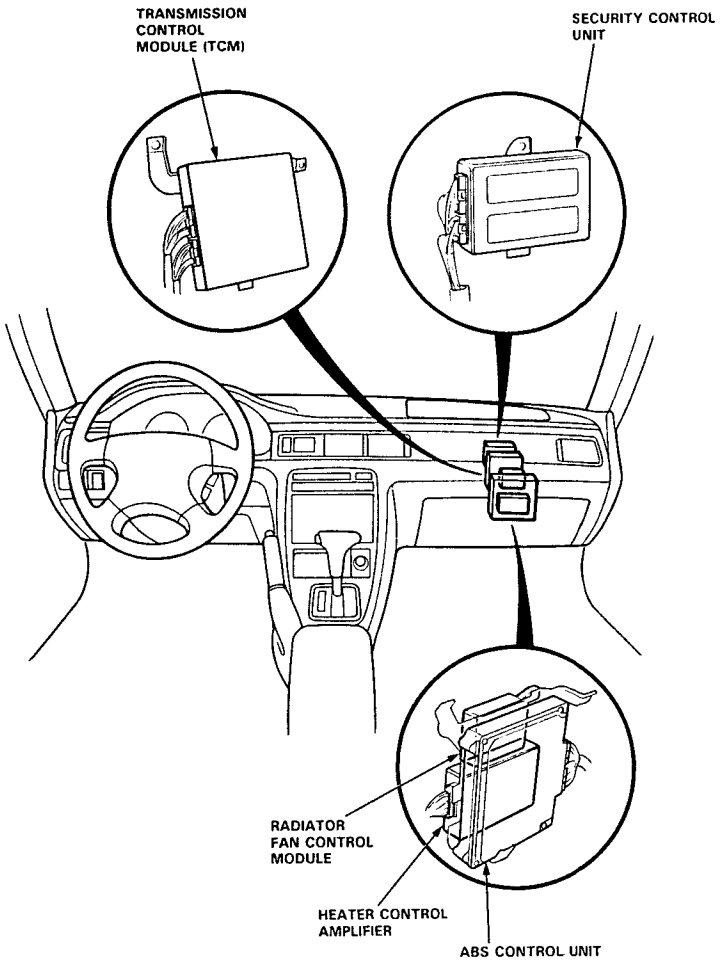

(cont'd)

Relay and Control Unit Locations

Dashboard (cont'd)

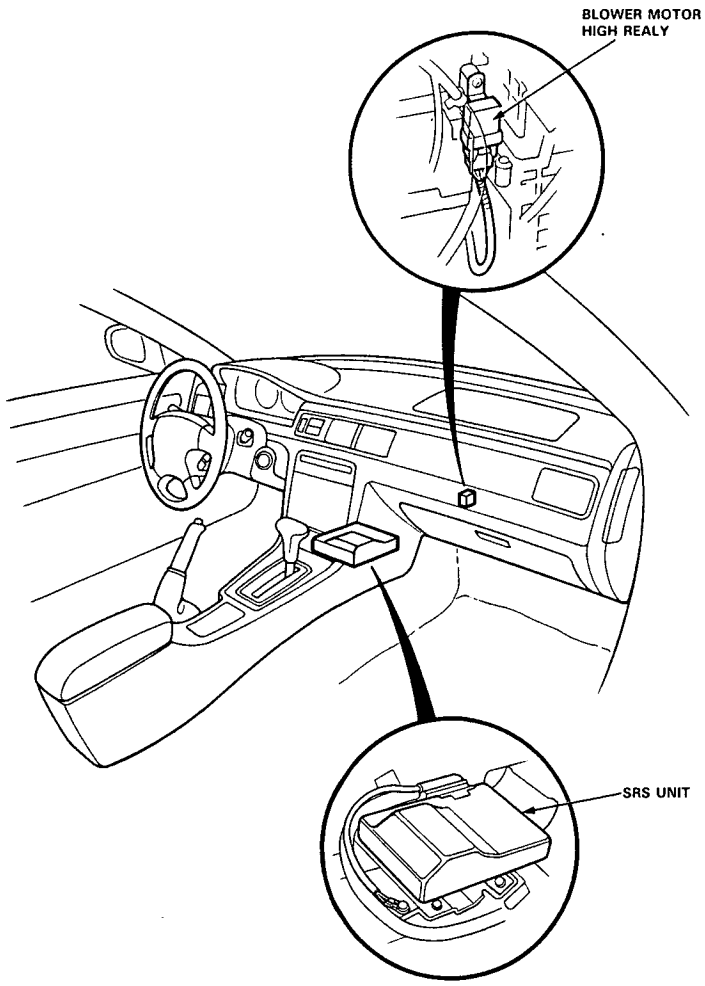

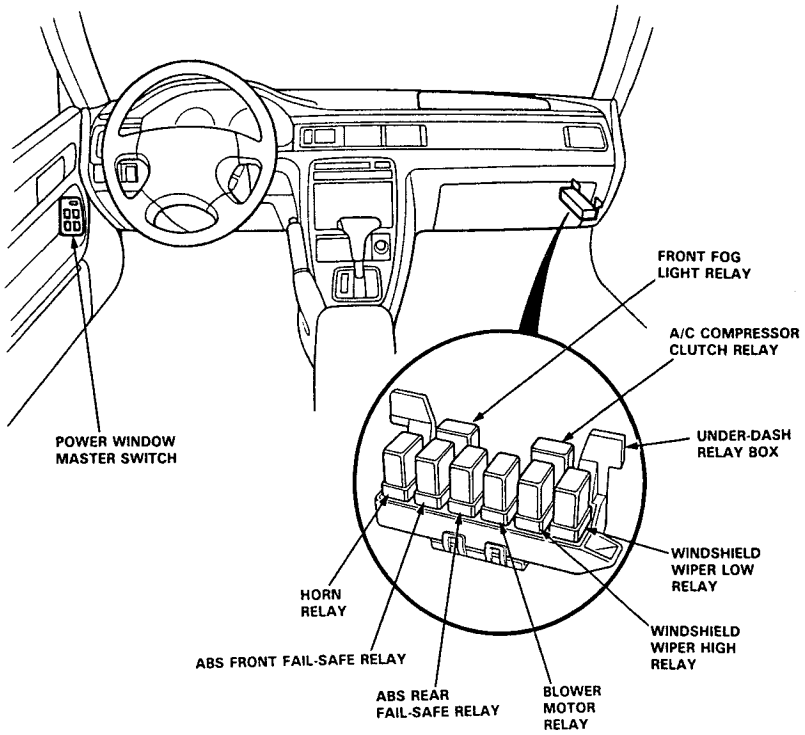

(cont'd)

Relay and Control Unit Locations

Dashboard (cont'd)

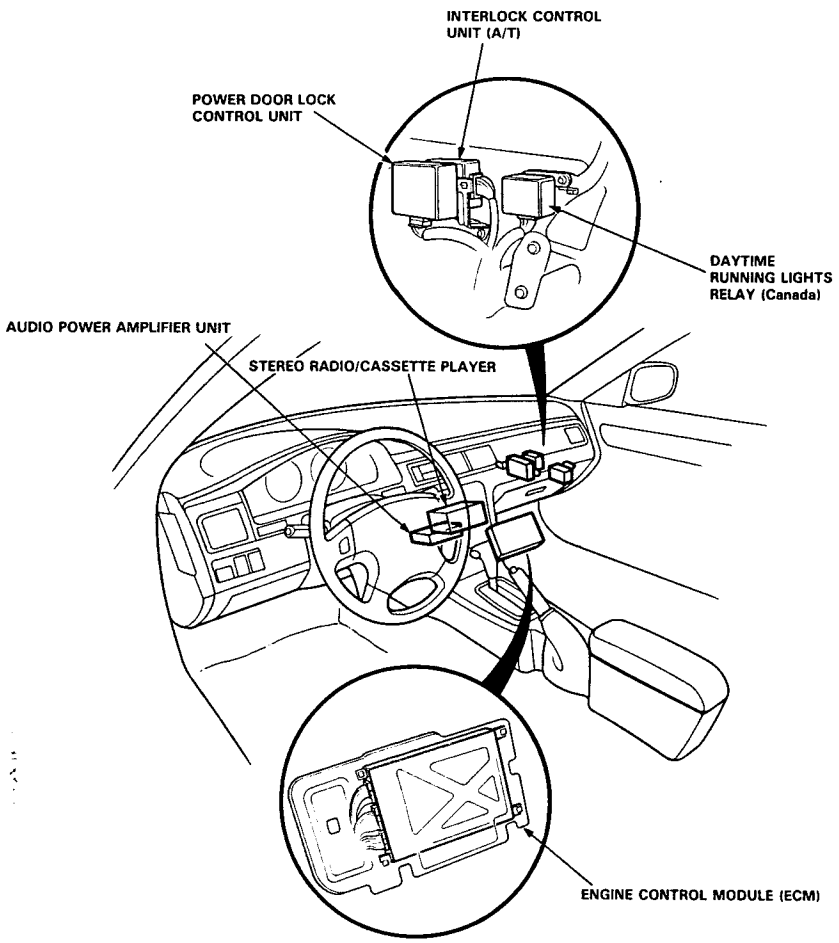

Seat

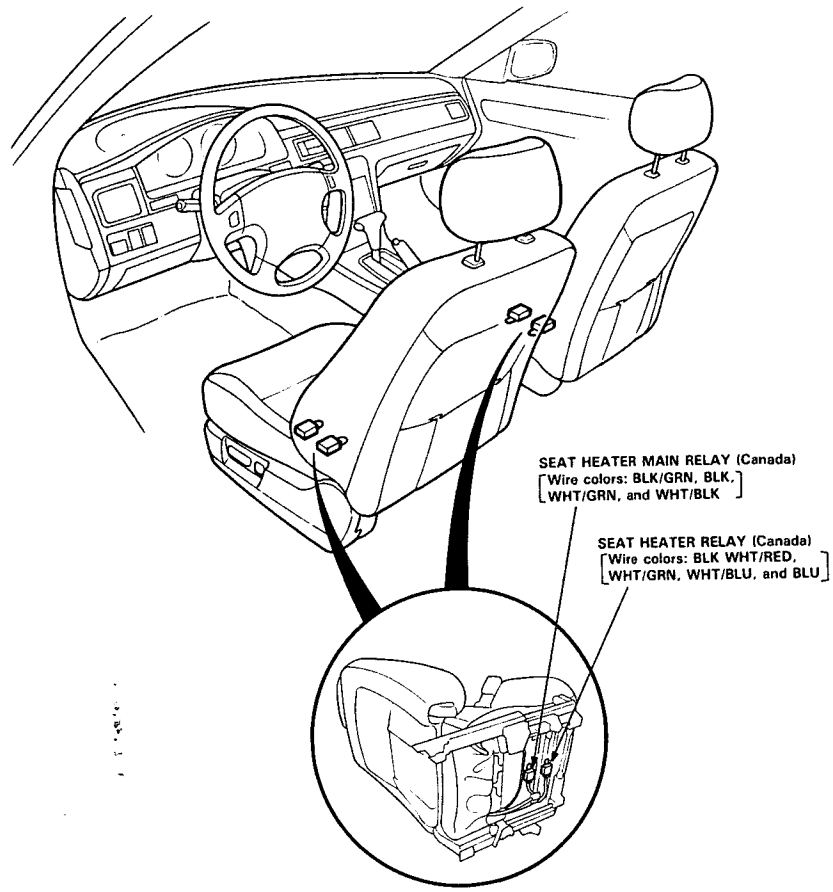

Relay and Control Unit Locations

Trunk

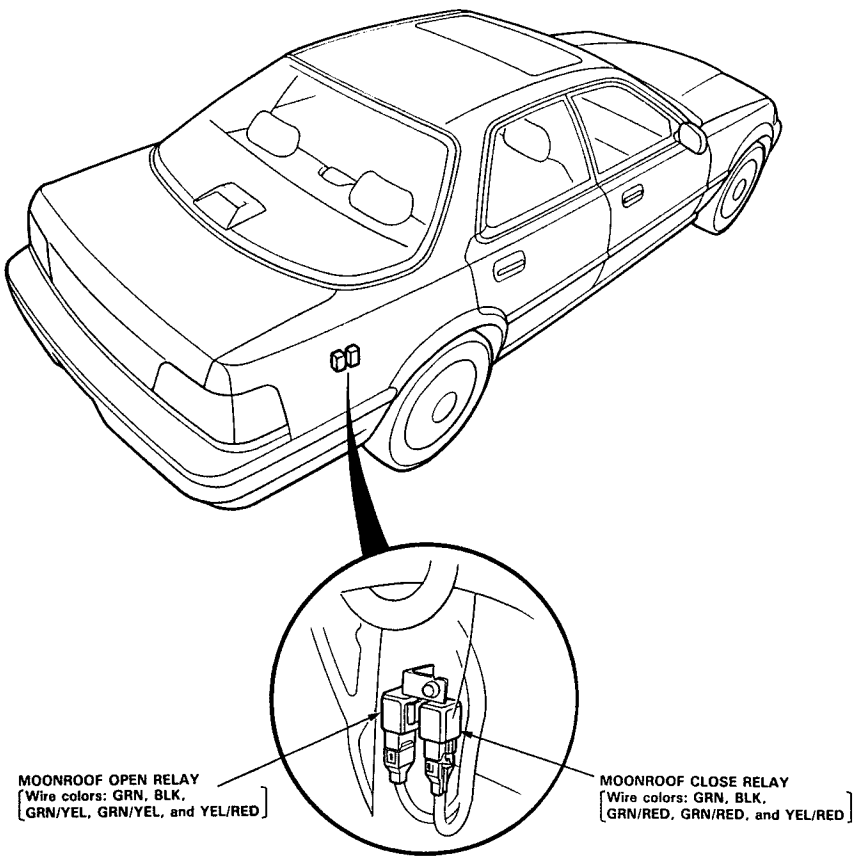

Connector Identification and Wire Harness Routing

How to Identify Connectors:
Identification numbers have been assigned to all connectors. The number is preceded by the letter "C" for connectors, "G" for ground terminals or "T" for non-ground terminals.

Harness \ Location	Engine compartment	Dashboard	Others (Floor, Door, Trunk, Roof)
Starter cables	T1, T2, T3, and ⊕		
Battery ground cables	T4 G1 and ⊖		
Engine ground wires	T5 and T6 G2, G3, and G4		
Engine wire harness	C101 through C129 T101 and T102 G101		
A/T sub-harness	C151 through C156		
A/T gear position switch sub-harness	C161 through C162		
Back-up light sub-harness (M/T)	C171 through C172		
Main wire harness	C201 through C226 C301 through C329 G201, G301, and G302	C401 through C466 G401 and G402	C414 through C417
Rear wire harness			C501 through C532 G501 and G502
Dashboard wire harness		C601 through C626 G601	
Heater sub-harness		C651 through C659	
Driver's door wire harness			C701 through C713
Front passenger's door wire harness			C721 through C731
Left rear door wire harness			C716 through C719
Right rear door wire harness			C736 through C739
Driver's power seat wire harness			C741 through C749
Roof wire harness			C751 through C760
Fuel unit sub-harness			C761 through C763
Rear window defogger ground wire			C771 G771
SRS main harness			C801 through C807 G801

Starter Cables

Connector or Terminal	Number of Cavities	Location	Connects to	Notes
T1 T2 T3		Right side of engine compartment Right side of engine compartment Left side of engine compartment	Under-hood fuse/relay box Under-hood ABS fuse/relay box Starter motor	
⊕		Battery	Battery positive terminal	

Battery Ground Cables

Connector or Terminal	Number of Cavities	Location	Connects to	Notes
T4		Clutch housing	Body ground, via battery ground cables	
G1		Right side of front bulkhead	Body ground, via battery ground cables	
⊖		Battery	Battery negative terminal	

Engine Ground Cables

Connector or Terminal	Number of Cavities	Location	Connects to	Notes
T5 T6		Right side of engine Right side of engine	Valve cover Valve cover	
G2 G3 G4		Right shock tower Right shock tower Right shook tower	Body ground, via engine ground cables Body ground, via engine ground cables Body ground, via engine ground cables	

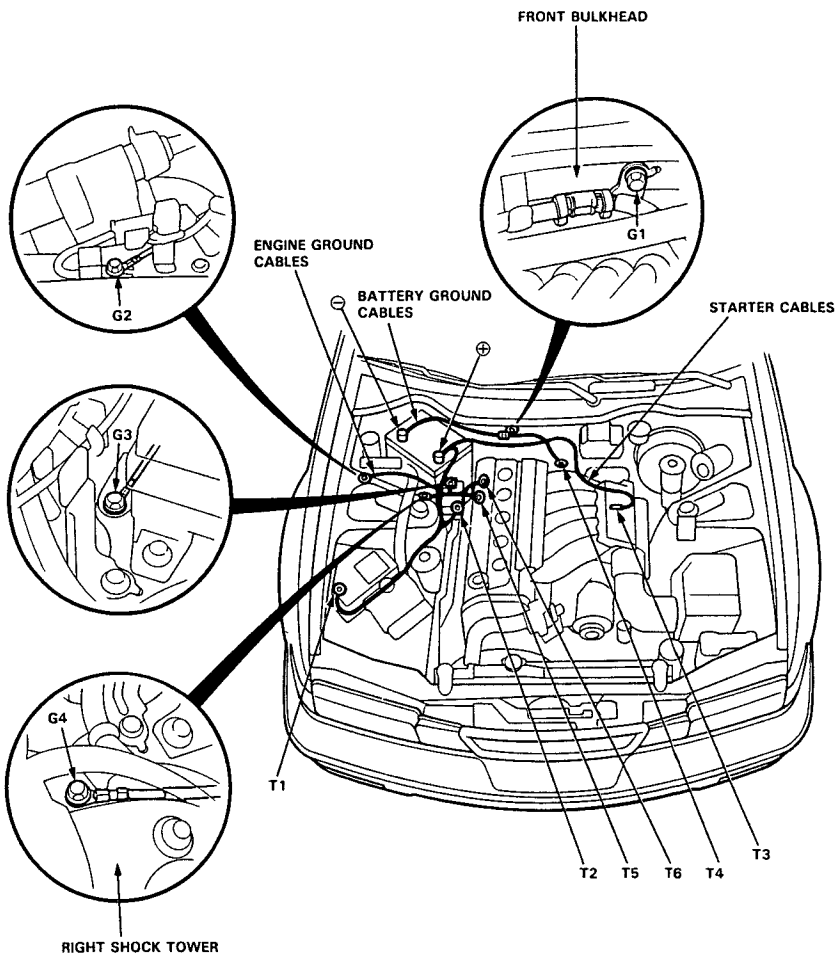

Engine Wire Harness

Connector or Terminal	Number of Cavities	Location	Connects to	Notes
C101	14	Left side of engine compartment	Main wire harness (C307)	
C102	14	Left side of engine compartment	Main wire harness (C306)	
C103	10	Left side of engine compartment	Main wire harness (C308)	A/T
C104	6	Left side of engine compartment	Fuel injector resistor	
C105	1	Left side of engine compartment	Main wire harness (C309)	
C106	2	Middle of engine	Intake air bypass (IAB) control solenoid valve	
C107	1	Left side of engine compartment	Starter solenoid	
C108	2	Engine compartment	Back-up light sub-harness (C171)	M/T
C109	14	Engine compartment	A/T sub-harness (C151)	A/T
C110	3	Middle of engine compartment	EGR valve lift sensor	
C111	2	Middle of engine	No. 5 fuel injector	
C112	2	Middle of engine	No. 4 fuel injector	
C113	2	Middle of engine	No. 3 fuel injector	
C114	2	Middle of engine	No. 2 fuel injector	
C115	2	Middle of engine	No. 1 fuel injector	
C116	2	Middle of engine	Engine coolant temperature (ECT) switch B	
C117	6	Middle of engine	TDC/CKP/CYP sensor	
C118	1	Left side of engine compartment	Engine oil pressure switch	
C119	2	Left side of engine	Rear knock sensor (KS)	
C120	3	Left side of engine	Vehicle speed sensor (VSS)	
C121	2	Left side of engine compartment	EVAP purge control solenoid valve	
C122	2	Left side of engine compartment	Idle air control (IAC) valve	
C123	2	Left side of engine	Front knock sensor (KS)	
C124	2	Middle of engine	Throttle position (TP) sensor	
C125	2	Middle of engine	Intake air temperature (IAT) sensor	
C126	4	Middle of engine compartment	Alternator	
C127	2	Middle of engine	Engine coolant temperature (ECT) sensor	
C128	1	Middle of engine	Engine coolant temperature (ECT) sending unit	
C129	14	Right side of engine compartment	Main wire harness (C219)	
T101		Right side of engine compartment	Under-hood fuse/relay box	
T102		Middle of engine compartment	Alternator	
G101		Left side of engine	Engine ground, via engine wire harness	

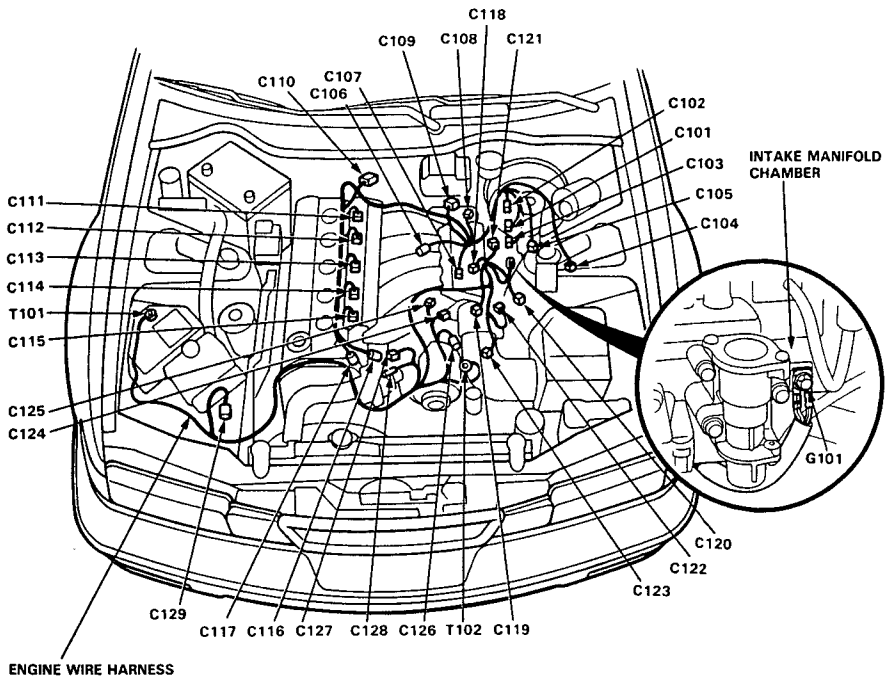

Connector Identification and Wire Harness Routing

A/T Sub-harness

Connector or Terminal	Number of Cavities	Location	Connects to	Notes
C151	14	Engine compartment	Engine wire harness (C109)	
C152	2	Automatic transmission	Lock-up control solenoid valve	
C153	2	Automatic transmission	Linear solenoid valve	
C154	2	Automatic transmission	Mainshaft speed sensor	
C155	2	Automatic transmission	Countershaft speed sensor	
C156	2	Automatic transmission	Shift control solenoid valve	

A/T Gear Position Switch Sub-harness

Connector or Terminal	Number of Cavities	Location	Connects to	Notes
C161	12	Middle floor	Main wire harness (C411)	
C162	14	Automatic transmission	A/T gear position switch	

Back-up Light Sub-harness (M/T)

Connector or Terminal	Number of Cavities	Location	Connects to	Notes
C171	2	Transmission housing	Engine wire harness (C108)	
C172	2	Transmission housing	Back-up light switch	

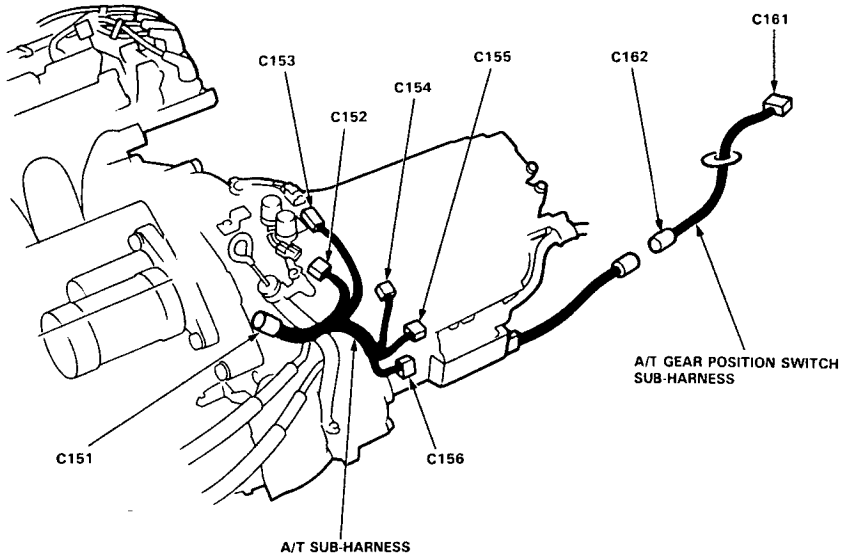

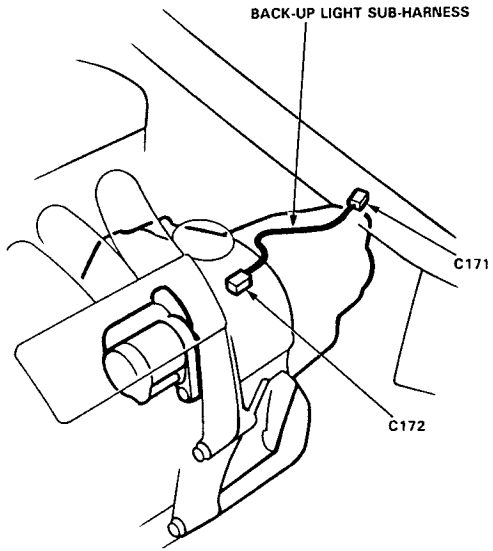

Main Wire Harness (Right side of engine compartment branch)

Connector or Terminal	Number of Cavities	Location	Connects to	Notes
C201	2	Behind right front wheelhouse	Windshield washer motor	
C202	4	Behind right front wheelhouse	Heated oxygen sensor (HO2S)	
C203	4	Right side of engine compartment	Ignition control module (ICM)	
C204	4	Right side of engine compartment	Ignition coil	
C205	2	Right side of engine compartment	Test tachometer connector	
C206	1	Right side of engine compartment	Noise condenser	
C207	4	Right side of engine compartment	Under-hood ABS fuse/relay box (C937)	
C208	3	Right side of engine compartment	Under-hood ABS fuse/relay box (C936)	
C209	2	Right side of engine compartment	Right front wheel speed sensor	ABS
C210	16	Right side of engine compartment	Under-hood fuse/relay box (C930)	
C211	10	Right side of engine compartment	Under-hood fuse/relay box (C928)	
C212	8	Right side of engine compartment	Under-hood fuse/relay box (C927)	
C213	7	Right side of engine compartment	Under-hood fuse/relay box (C929)	
C214	2	Right side of engine compartment	Under-hood fuse/relay box (C926)	
C215	10	Right side of engine compartment	ABS solenoids	
C216	2	Right side of engine compartment	ABS motor	
C217	2	Right side of engine compartment	ABS pressure switch	
C218	3	Right side of engine compartment	Under-hood fuse/relay box (C921)	
C219	14	Right side of engine compartment	Engine wire harness (C129)	
C220	4	Right side of engine compartment	Cruise control actuator	
C221	2	Behind right headlight	Right headlight (Low beam)	
C222	2	Behind right fog light	Right front fog light	
C223	2	Behind right headlight	Right headlight (High beam)	
C224	2	Behind right front side marker/ parking light	Right front side marker light	
C225	2	Behind right front side marker/ parking light	Right front parking light	
C226	2	Behind front bumper	Right front turn signal light	
C319	2	Middle of engine compartment	Low horn	
C320	2	Middle of engine compartment	Security hood switch	
C321	2	Behind front bumper	Left front turn signal light	
C322	2	Behind left fog light	Left front fog light	
C323	2	Behind left head light	Left headlight (High beam)	
C324	2	Left front corner of engine compartment	Left front side marker light	
C325	2	Left front corner of engine compartment	Left front parking light	
C326	2	Behind left headlight	Left headlight (Low beam)	
C327	2	Left side of engine compartment	High horn	
C328	3	Left side of engine compartment	Ignition timing adjuster	
C329	3	Left side of engine compartment	Manifold absolute pressure (MAP) sensor	
G201		Right side of engine compartment	Body ground, via main wire harness	
G301		Left side of engine compartment	Body ground, via main wire harness	

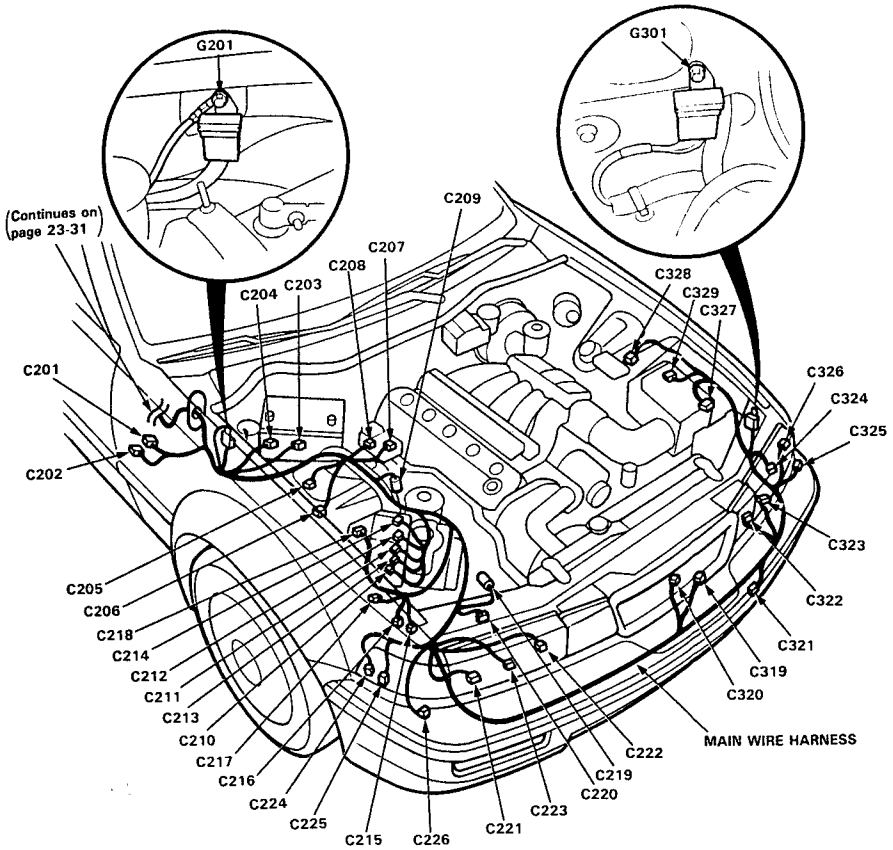

Main Wire Harness (cont'd) (Left side of engine compartment branch)
NOTE: See page 23-24 for connectors C319 through C329 and G301.

Connector or Terminal	Number of Cavities	Location	Connects to	Notes
C301	4	Left side of engine compartment	Condenser fan relay	
C302	5	Left side of engine compartment	Windshield wiper motor	
C303	1	Left side of engine compartment	Brake fluid level switch (+)	
C304	1	Left side of engine compartment	Brake fluid level switch (−)	
C305	4	Middle of engine compartment	EGR control solenoid valve and water valve solenoid	
C306	14	Left side of engine compartment	Engine wire harness (C102)	
C307	14	Left side of engine compartment	Engine wire harness (C101)	
C308	10	Left side of engine compartment	Engine wire harness (C103)	A/T
C309	1	Left side of engine compartment	Engine wire harness (C105)	
C310	2	Left side of engine compartment	A/C pressure switch	
C311	2	Left side of engine compartment	Left front wheel sensor	ABS
C312	2	Left side of engine compartment	A/C compressor clutch	
C313	4	Middle of engine compartment	Radiator fan motor	
C314	2	Middle of engine compartment	Engine coolant temperature (ECT) switch A	
C315	2	Middle of engine compartment	Condenser fan motor	
C316	2	Middle of engine compartment	Power steering pressure (PSP) switch	
C317	2	Middle of engine compartment	Radiator fan motor	
C318	6	Middle of engine compartment	Intermittent wiper relay	
C319	2	Middle of engine compartment	Low horn	
C320	2	Middle of engine compartment	Security hood switch	
C321	2	Behind front bumper	Left front turn signal light	
C322	2	Behind left fog light	Left front fog light	
C323	2	Behind left headlight	Left headlight (High beam)	
C324	2	Left front corner of engine compartment	Left front side marker light	
C325	2	Left front corner of engine compartment	Left front parking light	
C326	2	Behind left headlight	Left headlight (Low beam)	
C327	2	Left side of engine compartment	High horn	
C328	3	Left side of engine compartment	Ignition timing adjuster	
C329	3	Left side of engine compartment	Manifold absolute pressure (MAP) sensor	
G301		Left side of engine compartment	Body ground, via main wire harness	
G302		Left side of engine compartment	Body ground, via main wire harness	

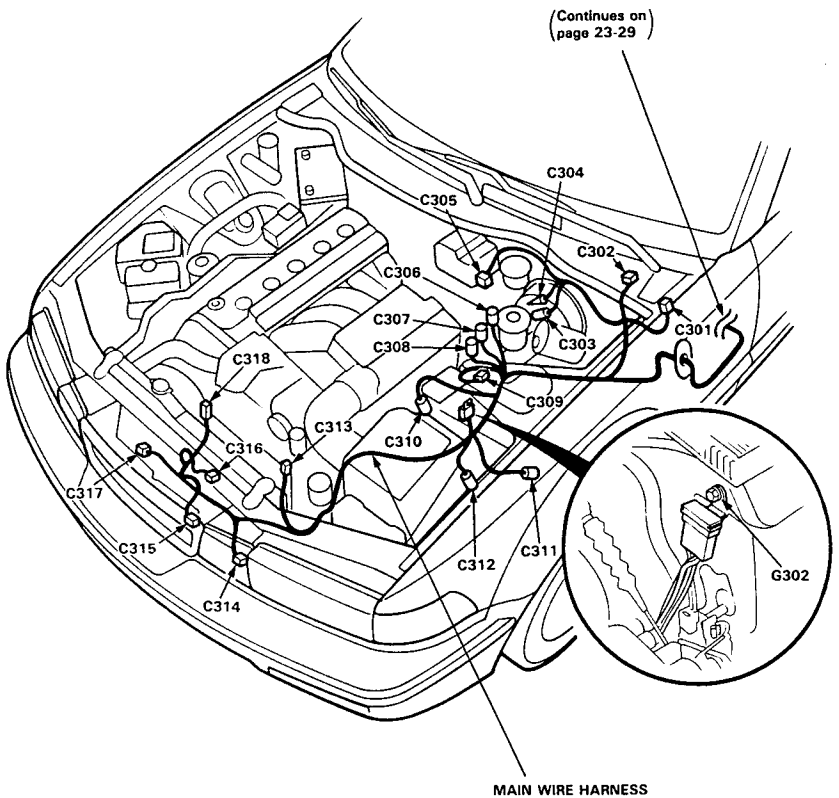

(cont'd)

Main Wire Harness (cont'd) (Left side of dash and floor branch)

Connector or Terminal	Number of Cavities	Location	Connects to	Notes
C401	16	Behind left kick panel	Integrated control unit	
C402		Behind left kick panel	No. 12 (7.5 A) auxiliary fuse holder	
C403	18	Behind left kick panel	Under-dash fuse/relay box (C914)	
C404	16	Behind left kick panel	Under-dash fuse/relay box (C913)	
C405	10	Behind left kick panel	Under-dash fuse/relay box (C910)	
C406	5	Behind left kick panel	Under-dash fuse/relay box (C912)	
C407	3	Behind left kick panel	Under-dash fuse/relay box (C911)	
C408		Under middle of dash	Junction connector	
C409	2	Under middle of dash	Service check connector	
C410	2	Under middle of dash	Dashboard wire harness (C619)	
C411	12	Under middle of dash	A/T gear position switch sub-harness (C161)	A/T
C412	2	Under middle of dash	Shift lock solenoid	A/T
C413	3	Under middle of dash	A/T gear position console light	A/T
C414	1	Middle floor	Parking brake switch	
C415	4	Left side of floor	Driver's power seat wire harness (C741)	USA
C415	8	Left side of floor	Driver's power seat wire harness (C741)	Canada
C417	2	Left side of floor	Driver's seat belt switch	
C418	18	Behind left kick panel	Rear wire harness (C504)	
C419	2	Behind left kick panel	Rear wire harness (C505)	
C420	7	Under left side of dash	PGM-FI main relay	
C421	4	Under left side of dash	Starter cut relay	
C422	2	Under left side of dash	Chime	
C423	4	Under left side of dash	Power mirror defogger relay	Canada
C424	4	Under left side of dash	SRS main harness (C802)	
C425		Under left side of dash	Junction connector	
C426	17	Driver's door area	Driver's door wire harness (C702)	
C427	15	Driver's door area	Driver's door wire harness (C701)	
C428	14	Under left side of dash	Cruise control unit	
C429	2	Under left side of dash	Clutch switch (Cruise control)	M/T
C430	4	Under left side of dash	Brake switch	
C431	2	Under left side of dash	Clutch interlock switch	M/T
C432	16	Under left side of dash	Dashboard wire harness (C603)	
C433	12	Under left side of dash	Combination light/turn signal switch	
C434	10	Under left side of dash	Windshield wiper/washer switch	
C435	8	Under left side of dash	Ignition switch	
G401		Behind left kick panel	Body ground, via main wire harness	

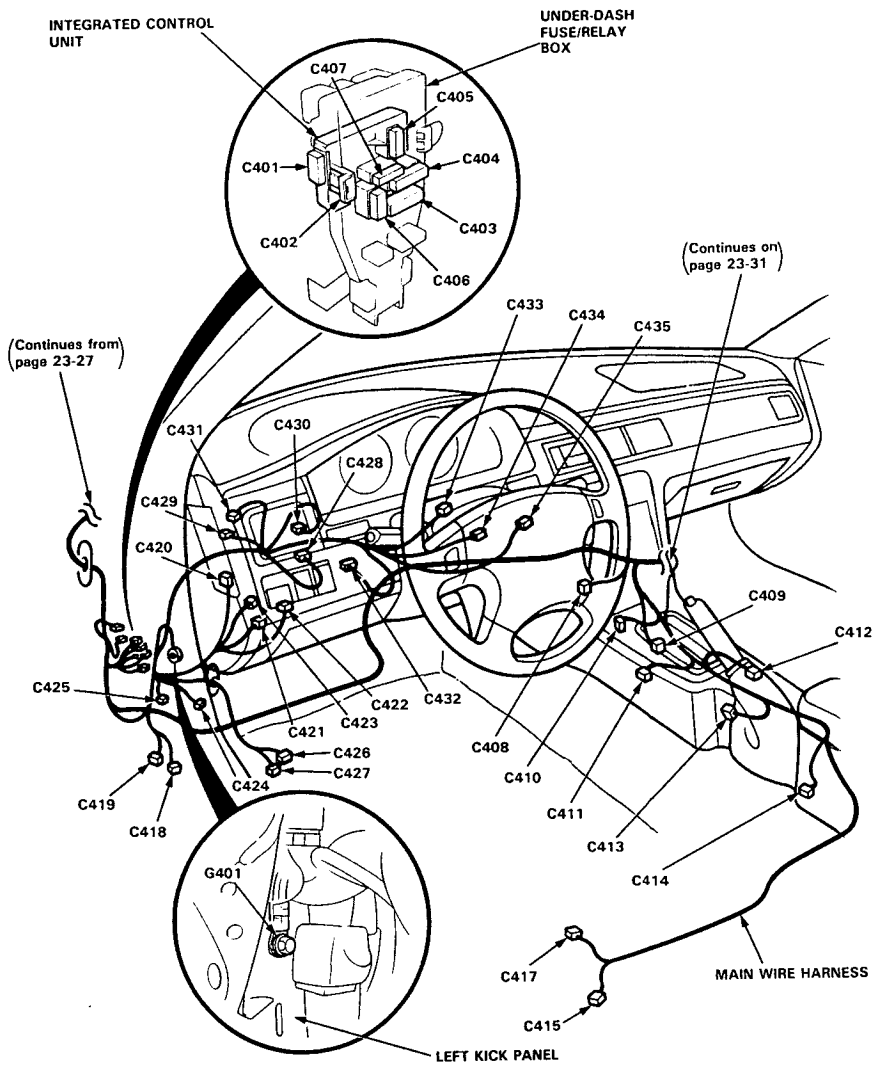

(cont

Main Wire Harness (cont'd) (Right side of dash and floor branch)

Connector or Terminal	Number of Cavities	Location	Connects to	Notes
C436	26	Under right side of dash	Engine control module (ECM)	
C437	22	Under right side of dash	Engine control module (ECM)	
C438	16	Under right side of dash	Engine control module (ECM)	
C439	12	Under right side of dash	Engine control module (ECM)	
C440	26	Under right side of dash	Transmission control module (TCM)	
C441	22	Under right side of dash	Transmission control module (TCM)	
C442	18	Under right side of dash	Security control unit	
C443	12	Under right side of dash	Security control unit	
C444	3	Under right side of dash	Heater sub-harness (C654)	
C445		Under right side of dash	Junction connector	
C446		Under right side of dash	Junction connector	
C447	18	Under right side of dash	ABS control unit	
C448	12	Under right side of dash	ABS control unit	
C449	14	Under right side of dash	Heater control amplifier	
C450	8	Under right side of dash	Radiator fan control module	
C451	16	Under right side of dash	C452 connector	
C452	16	Under right side of dash	C451 connector	
C453	4	Under-dash relay box	Front fog light relay	
C454	4	Under-dash relay box	A/C compressor clutch relay	
C455	4	Under-dash relay box	Horn relay	
C456	4	Under-dash relay box	ABS front fail-safe relay	
C457	4	Under-dash relay box	ABS rear fail-safe relay	
C458	4	Under-dash relay box	Blower motor relay	
C459	4	Under-dash relay box	Windshield wiper high relay	
C460	4	Under-dash relay box	Windshield wiper low relay	
C461		Under right side of dash	Junction connector	
C462	14	Under right side of dash	Daytime running lights control unit	Canada
C463	12	Under right side of dash	Power door lock control unit	
C464	8	Under right side of dash	Interlock control unit	A/T
C465	3	Under right side of dash	Keyless power door lock system	Optional
C466	17	Front passenger's door area	Front passenger's door wire harness (C722)	
C467	15	Front passenger's door area	Front passenger's door wire harness (C721)	
C468	20	Under right side of dash	Dashboard wire harness (C625)	
C469	18	Under right side of dash	Dashboard wire harness (C626)	A/T
C469	10	Under right side of dash	Dashboard wire harness (C626)	M/T
C470	6	Right side of floor	ABS inspection connector	
C471	3	Right side of floor	Front passenger's seat heater	Canada
C472	1	Right B-pillar area	Front passenger's door switch	
C473	8	Right rear door area	Right rear door wire harness (C736)	
G402		Behind right kick panel	Body ground, via main wire harness	

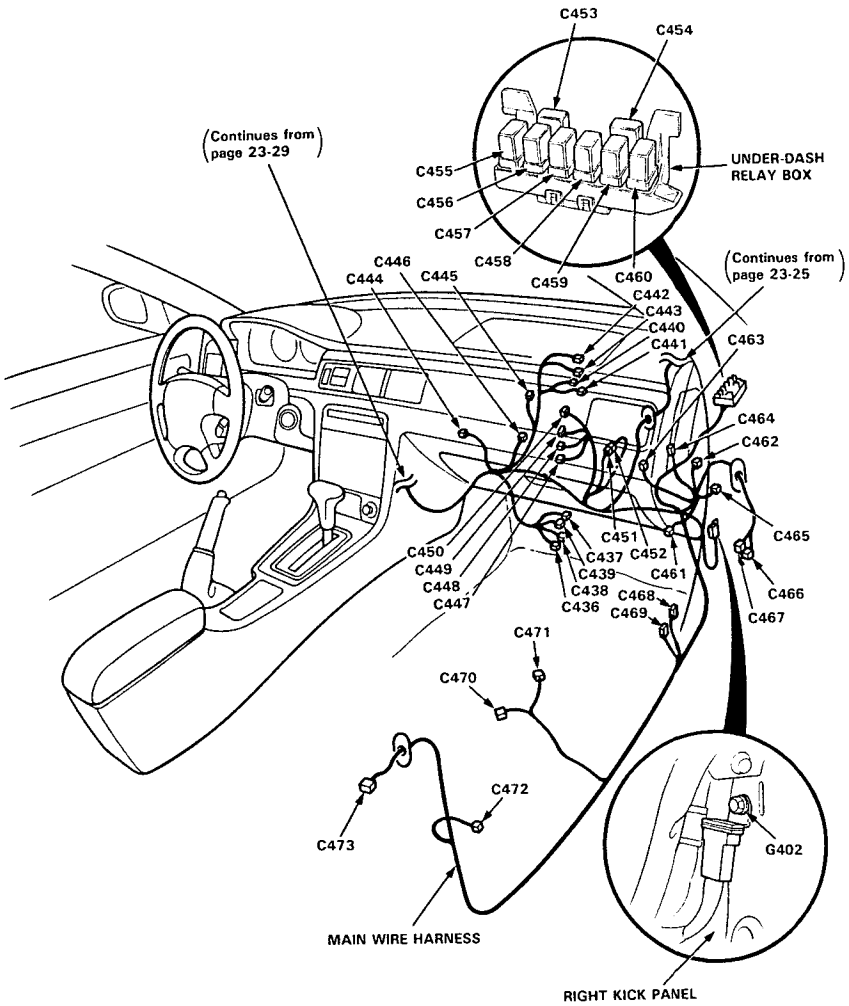

(cont'd)

Rear Wire Harness

Connector or Terminal	Number of Cavities	Location	Connects to	Notes
C501	20	Behind left kick panel	Dashboard wire harness (C601)	
C502	12	Behind left kick panel	Under-dash fuse/relay box (C916)	
C503	2	Behind left kick panel	Under-dash fuse/relay box (C915)	
C504	18	Behind left kick panel	Main wire harness (C418)	
C505	2	Behind left kick panel	Main wire harness (C419)	
C506	8	Left rear door area	Left rear door wire harness (C716)	
C507	1	Left B-pillar area	Driver's door switch	
C508	8	Left C-pillar area	Roof wire harness (C756)	
C509	1	Left quarter panel area	Left rear door switch	
C510		Left front trunk area	Junction connector	
C511	4	Left front trunk area	Cellular phone system	Optional
C512	2	Left side of rear shelf panel	Left rear speaker	
C513	2	Middle of rear shelf	Trunk light	
C514	2	Middle of rear shelf	High mount brake light	
C515	4	Middle of tank area	Fuel unit sub-harness (C761)	
C516	1	Right quarter panel area	Right rear door switch	
C517	2	Right C-pillar area	Roof wire harness (C758)	
C518	2	Right side of rear shelf	Right rear speaker	
C519	1	Right side of rear shelf	Noise condenser	
C520	1	Right C-pillar area	Rear window defogger	
C521	2	Right side of trunk area	Right rear wheel speed sensor	ABS
C522	6	Right side of trunk area	Moonroof open relay	
C523	6	Right side of trunk area	Moonroof close relay	
C524	8	Right side of trunk area	Right taillight	
C525	2	Middle of trunk area	Security trunk key cylinder switch	
C526	2	Middle of trunk area	Trunk latch switch	
C527	2	Middle of trunk area	Security trunk latch switch	
C528	8	Left side of trunk area	Trailer lighting connector	
C529	3	Left side of trunk area	Power antenna motor	
C530	2	Left side of trunk area	Left rear wheel sensor	ABS
C531	8	Left side of trunk area	Left taillight	
C532	4	Behind rear bumper	License light	
G501		Left side of rear floor	Body ground, via rear wire harness	
G502		Left side of rear floor	Body ground, via rear wire harness	

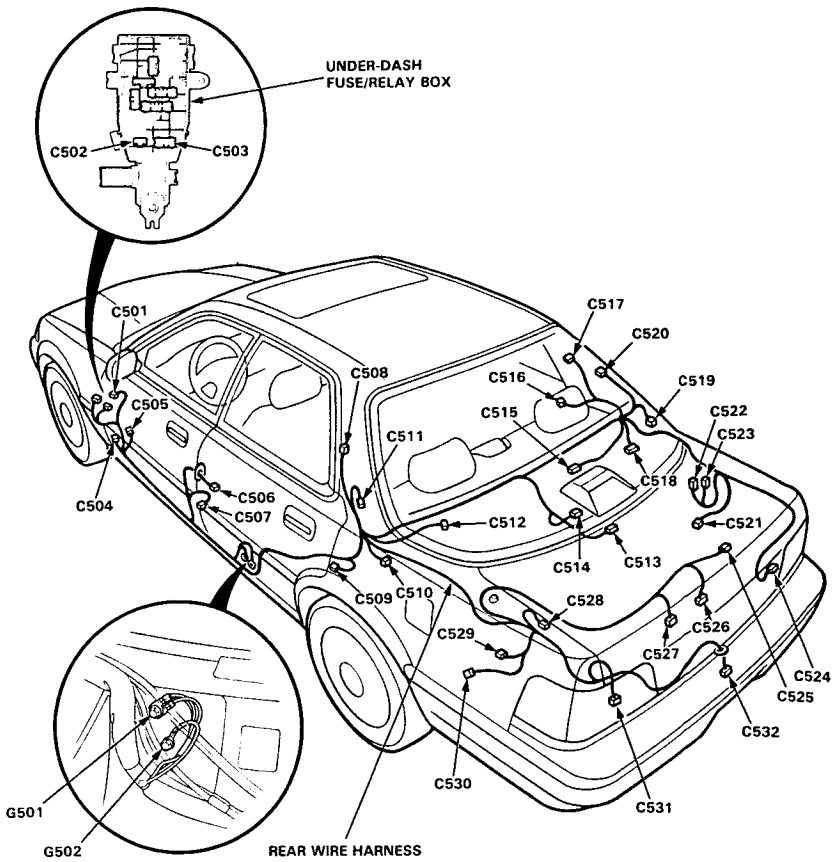

Dashboard Wire Harness

Connector or Terminal	Number of Cavities	Location	Connects to	Notes
C601	20	Under left side of dash	Rear wire harness (C501)	
C602	18	Behind left kick panel	Under-dash fuse/relay box (C905)	
C603	16	Under left side of dash	Main wire harness (C432)	
C604	10	Behind instrument panel	Power mirror switch	
C605	3	Behind instrument panel	Dash lights brightness controller	
C606	5	Behind instrument panel	Moonroof switch	
C607	10	Behind instrument panel	Front fog light and cruise control main switches	
C608	10	Behind gauges	Gauge assembly	
C609	14	Behind gauges	Gauge assembly	A/T
C610	2	Behind instrument panel	Left front tweeter	
C611	16	Behind gauges	Gauge assembly	
C612	10	Behind gauges	Gauge assembly	
C613		Behind instrument panel	Junction connector	
C614	10	Behind middle of dash	Hazard warning switch	
C615	4	Behind middle of dash	Clock	
C616	6	Behind instrument panel	Rear window defogger switch	
C617	14	Under middle of dash	Heater control panel	
C618	4	Under middle of dash	Cigarette lighter	
C619	2	Under middle of dash	Main wire harness (C410)	
C620	16	Under middle of dash	Stereo radio/cassette player	
C621	8	Under middle of dash	Audio power amplifier unit	(LS)
C622	5	Under middle of dash	Stereo radio/cassette player	(GS)
C622	2	Under middle of dash	Stereo radio/cassette player	(LS)
C623	2	Behind instrument panel	Right front tweeter	
C624	2	Behind glove box	Glove box light	
C625	20	Under right side of dash	Main wire harness (C468)	
C626	18	Under right side of dash	Main wire harness (C469)	A/T
C626	10	Under right side of dash	Main wire harness (C469)	M/T
G601		Under middle of dash	Body ground, via dashboard wire harness	

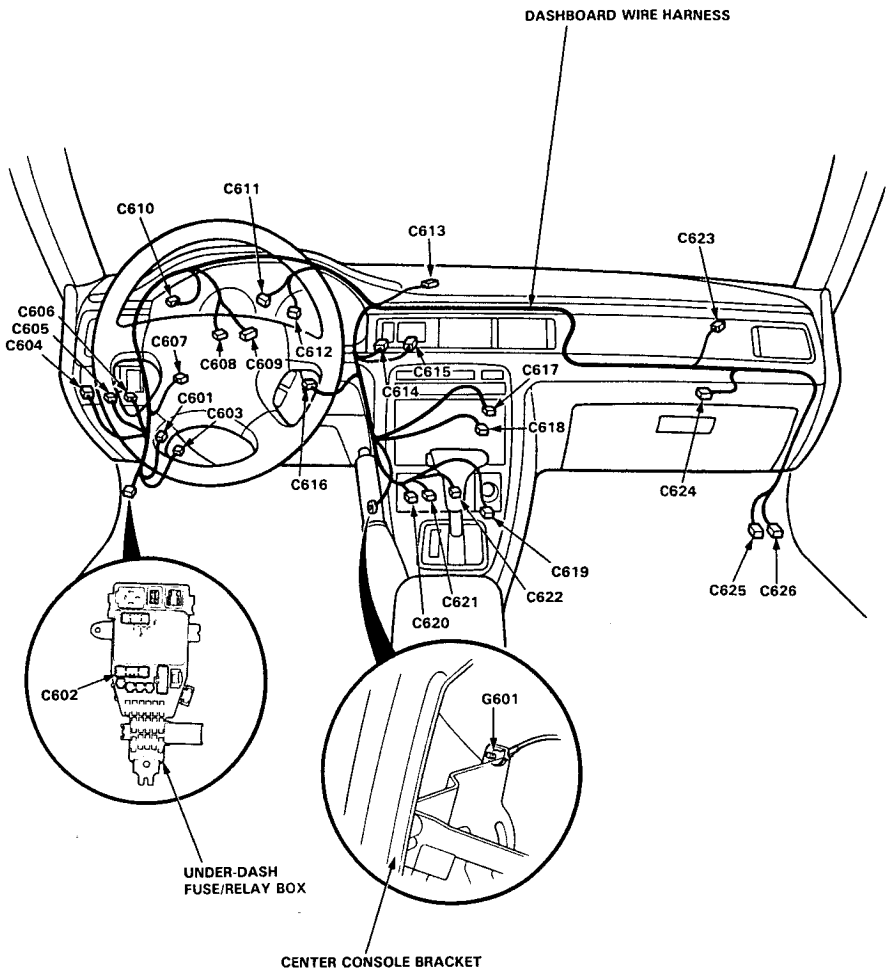

Connector Identification and Wire Harness Routing

Driver's Door Wire Harness

Connector or Terminal	Number of Cavities	Location	Connects to	Notes
C701	15	Driver's door	Main wire harness (C427)	
C702	17	Driver's door	Main wire harness (C426)	
C703	2	Driver's door	Left front door speaker	
C704	2	Driver's door	Driver's door courtesy light	
C705	2	Driver's door	Power window master switch	
C706	16	Driver's door	Power window master switch	
C707	5	Driver's door	Driver's seat heater switch	Canada
C708	3	Driver's door	Left power mirror	
C709	2	Driver's door	Left power mirror defogger	Canada
C710	3	Driver's door	Driver's door lock switch	
C711	4	Driver's door	Driver's power window motor	
C712	2	Driver's door	Security indicator	
C713	8	Driver's door	Driver's door lock actuator (LS)	Canada
C713	4	Driver's door	Driver's door lock actuator (LS)	Canada

Left Rear Door Wire Harness

Connector or Terminal	Number of Cavities	Location	Connects to	Notes
C716	8	Left rear door	Rear wire harness (C506)	
C717	2	Left rear door	Left rear power window motor	
C718	5	Left rear door	Left rear power window switch	
C719	4	Left rear door	Left rear door lock actuator	

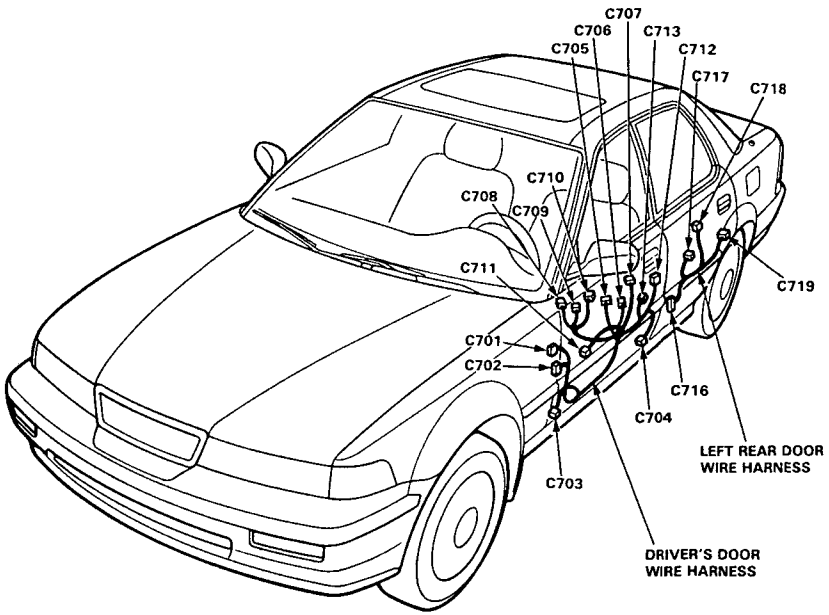

Connector Identification and Wire Harness Routing

Front Passenger's Door Wire Harness

Connector or Terminal	Number of Cavities	Location	Connects to	Notes
C721	15	Front passenger's door	Main wire harness (C467)	
C722	17	Front passenger's door	Main wire harness (C466)	
C723	2	Front passenger's door	Right front door speaker	
C724	2	Front passenger's door	Front passenger's door courtesy light	
C725	5	Front passenger's door	Front passenger's seat heater switch	Canada
C726	2	Front passenger's door	Right power mirror defogger	Canada
C727	3	Front passenger's door	Right power mirror	
C728	5	Front passenger's door	Front passenger's power window switch	
C729	3	Front passenger's door	Front passenger's door lock switch	
C730	2	Front passenger's door	Front passenger's power window motor	
C731	8	Front passenger's door	Front passenger's door lock actuator	
C731	2	Front passenger's door	Front passenger's door lock actuator (LS)	Canada

Right Rear Door Wire Harness

Connector or Terminal	Number of Cavities	Location	Connects to	Notes
C736	8	Right rear door	Main wire harness (C473)	
C737	2	Right rear door	Right rear power window motor	
C738	5	Right rear door	Right rear power window switch	
C739	4	Right rear door	Right rear door lock actuator	

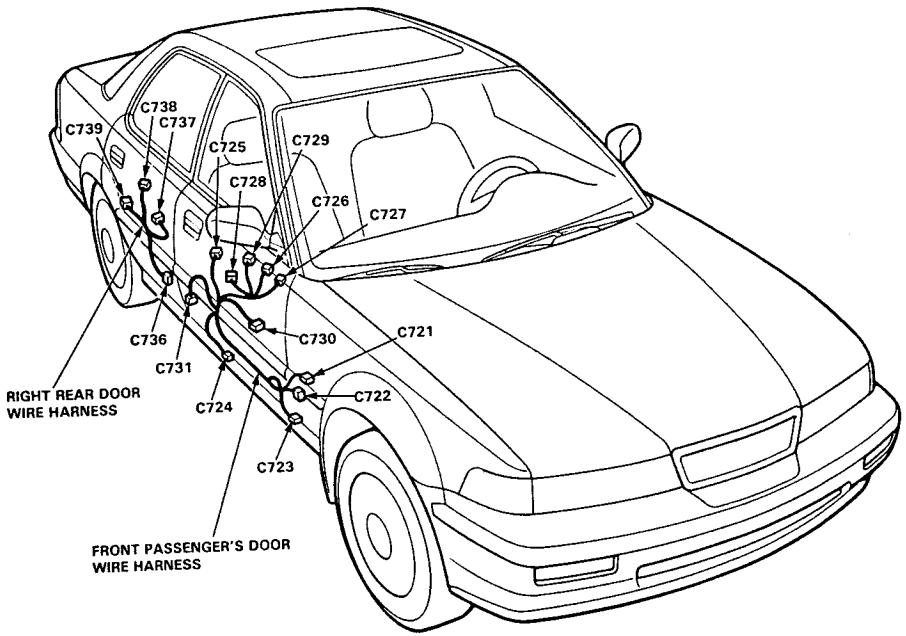

Connector Identification and Wire Harness Routing

Heater Sub-harness

Connector or Terminal	Number of Cavities	Location	Connects to	Notes
C651	22	Under right side of dash	Heater control amplifier	
C652	3	Under right side of dash	Power transistor	
C653	4	Under right side of dash	Blower motor high relay	
C654	3	Under right side of dash	Main wire harness (C444)	
C655	2	Under right side of dash	Blower motor	
C656	7	Under right side of dash	Air mixture control motor	
C657	7	Under left side of dash	Recirculation control motor	
C658	2	Under left side of dash	Evaporator temperature sensor	
C659	7	Under left side of dash	Mode control motor	

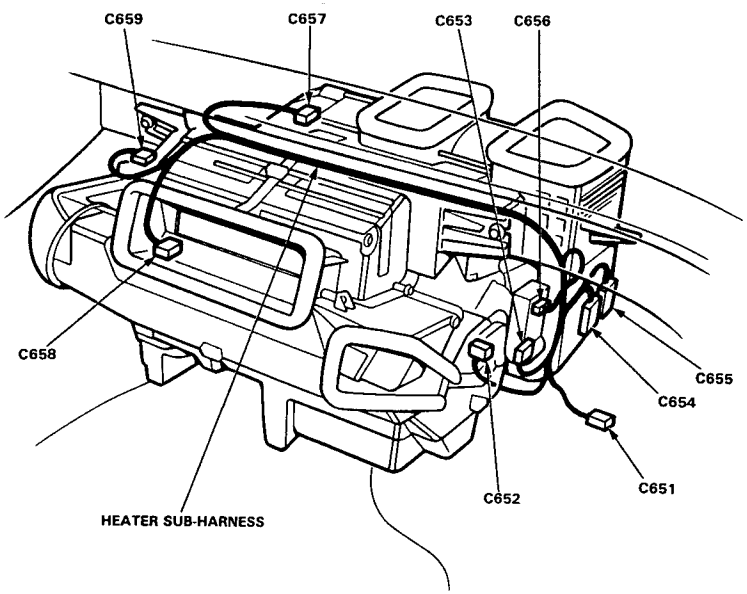

Driver's Power Seat Wire Harness

Connector or Terminal	Number of Cavities	Location	Connects to	Notes
C741	4	Left side of floor	Main wire harness (C415)	USA
C741	8	Left side of floor	Main wire harness (C415)	Canada
C742	2	Driver's seat-back	Recline motor	
C743	2	Under driver's seat	Slide motor	
C744	6	Left side of driver's seat	Driver's power seat slide switch	
C745	6	Left side of driver's seat	Driver's power seat recline switch	
C746	4	Under driver's seat	Seat heater main relay	Canada
C747	2	Under driver's seat	Seat-back heater	Canada
C748	4	Under driver's seat	Seat cushion heater	Canada
C749	6	Under driver's seat	Seat heater relay	Canada

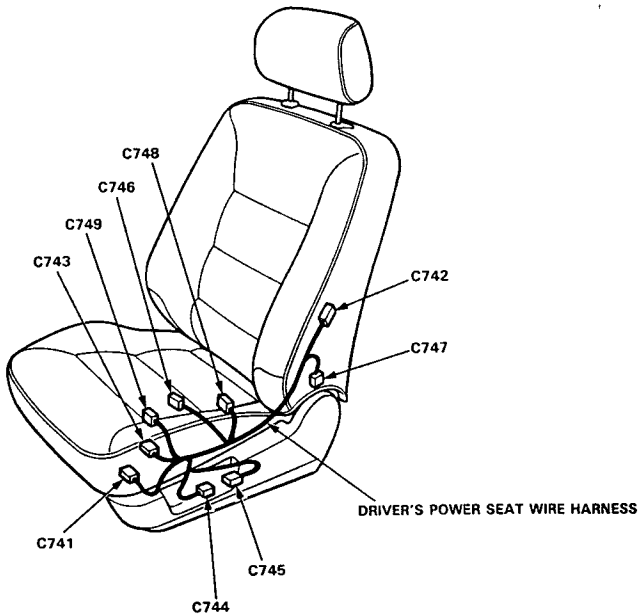

Roof Wire Harness

Connector or Terminal	Number of Cavities	Location	Connects to	Notes
C751	1	Roof area	Front passenger's vanity mirror light	
C752	2	Roof area	Right overhead speaker	
C753	4	Roof area	Ceiling light	
C754	2	Roof area	Left overhead speaker	
C755	4	Left C-pillar area	Left rear reading light	
C756	8	Left C-pillar area	Rear wire harness (C508)	
C757	2	Roof area	Moonroof motor	
C758	2	Right C-pillar area	Rear wire harness (C517)	
C759	3	Right C-pillar area	Right rear reading light	
C760	1	Roof area	Driver's vanity mirror light	

Fuel Unit Sub-harness

Connector or Terminal	Number of Cavities	Location	Connects to	Notes
C761	4	Fuel tank	Rear wire harness (C515)	
C762	3	Fuel tank	Fuel gauge sending unit	
C763	2	Fuel tank	Fuel pump (FP)	

Rear Window Defogger Ground Wire

Connector or Terminal	Number of Cavities	Location	Connects to	Notes
C771	1	Left C-pillar area	Rear window defogger	
G771		Left side of rear shelf	Body ground, via rear window defogger ground wire	

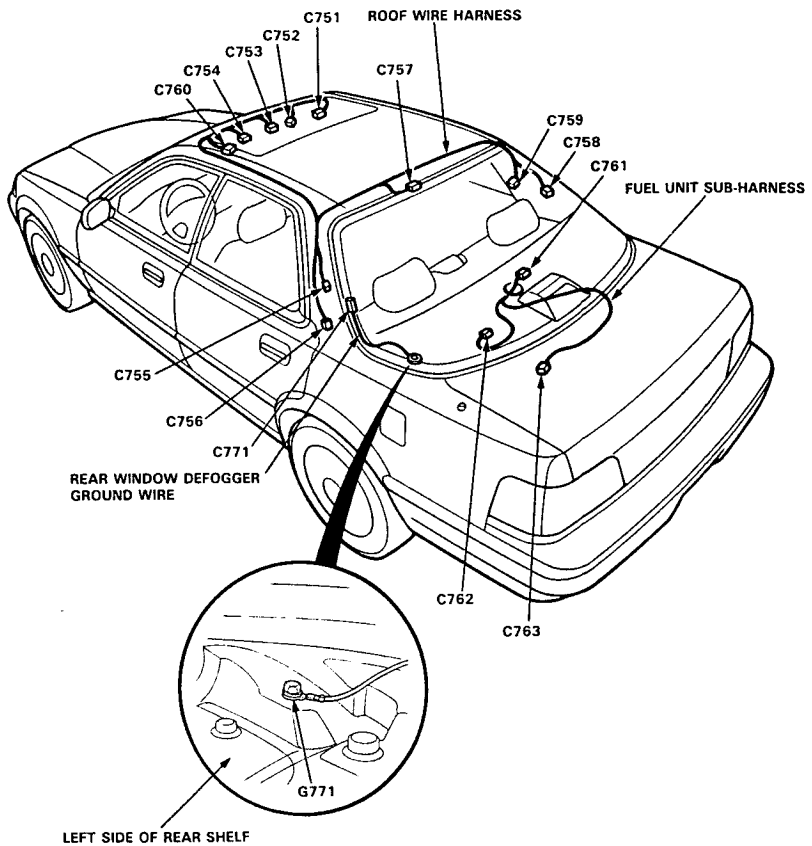

Connector Identification and Wire Harness Routing

SRS Main Harness

Connector or Terminal	Number of Cavities	Location	Connects to	Notes
C801	2	Behind left kick panel	Under-dash fuse/relay box (C906)	
C802	4	Under left side of dash	Main wire harness (C424)	
C803	2	Under left side of dash	Left dash sensor	
C804	6	Under left side of dash	Cable reel	
C805	18	Middle of floor	SRS unit	
C806	2	Under right side of dash	Right dash sensor	
C807	3	Behind glove box	Passenger's airbag assembly	
G801		Middle of floor	Body ground, via SRS wire harness	

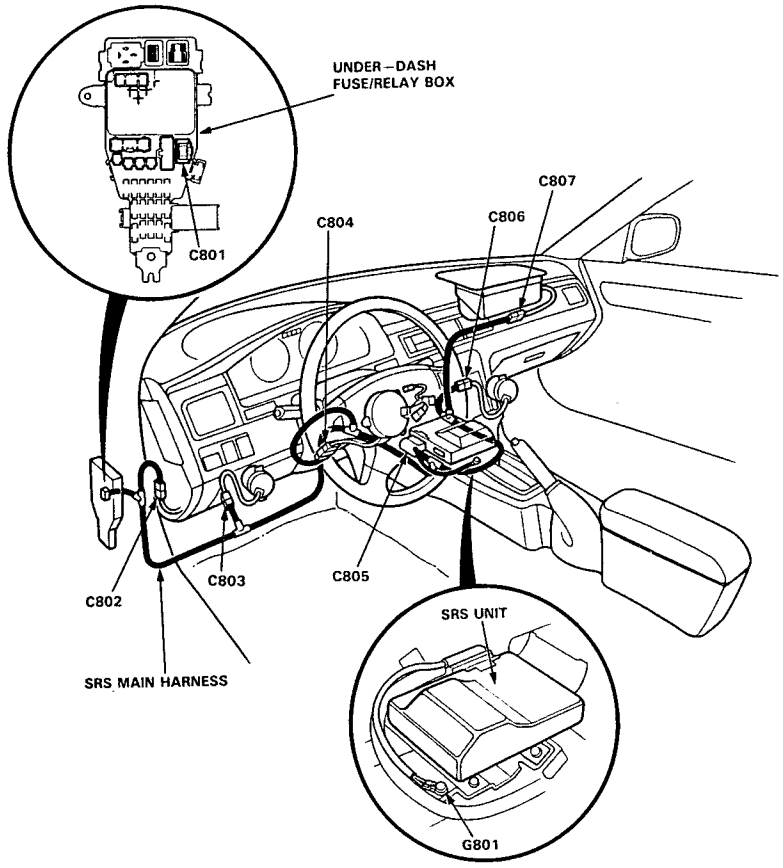

Fuses

Under-hood Fuse/Relay Box

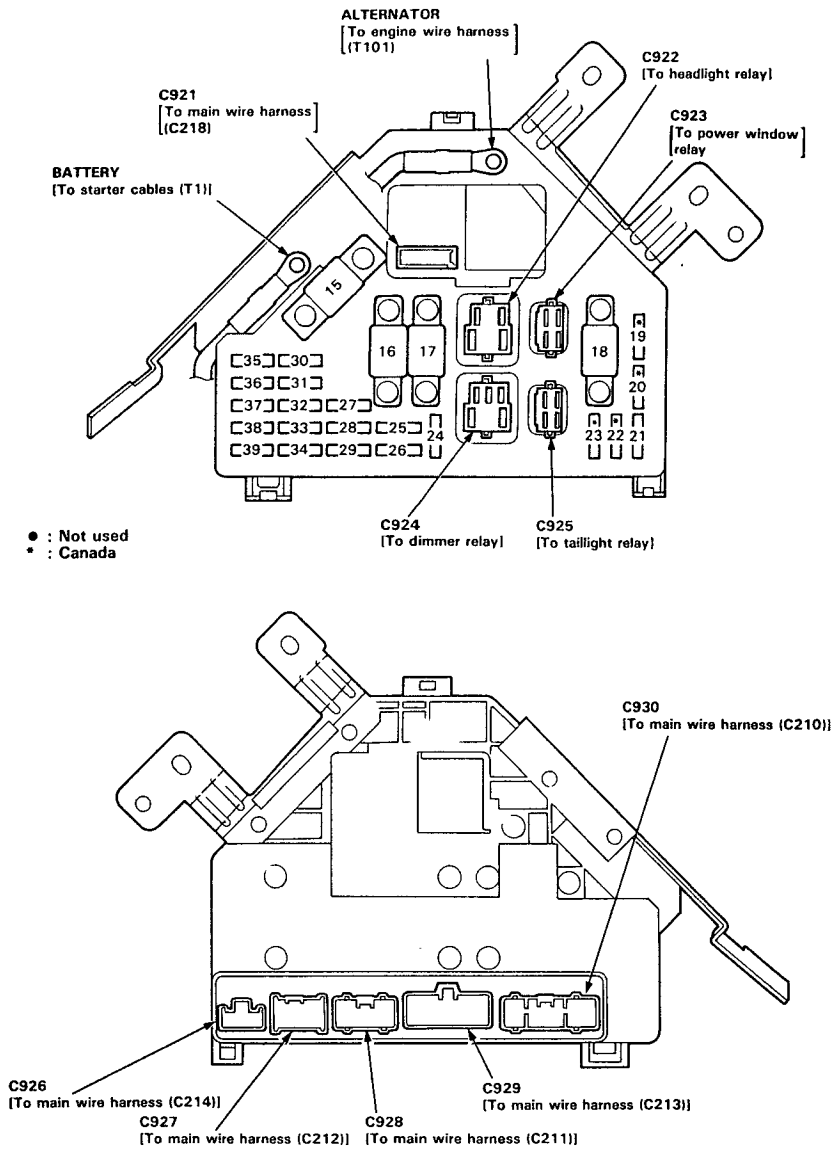

Fuse Number	Amps	Wire color	Component or circuit protected
15	100 A	–	Battery, Power distribution
16	40 A	YEL/GRN	Rear window defogger, Noise condenser
17	30 A	BLU/WHT	Blower motor
18	50 A	WHT	Ignition switch (BAT)
19	20 A	RED/YEL	Left headlight, Daytime running lights control unit (Canada)
20	20 A	RED/GRN	Right headlight, Daytime running lights control unit (Canada)
21	15 A	RED/GRN	Dash lights, Parking lights, Security control unit
22	15 A	WHT/BLK	Seat heater system (Canada)
23	–	–	Not used
24	20 A	YEL/BLK	Right rear power window motor
25	20 A	GRN/BLK	Left rear power window motor
26	20 A	BLU/BLK	Front passenger's power window motor
27	20 A	WHT/RED	Driver's power seat recline motor
28	20 A	WHT/YEL	Driver's power window motor, Power window control unit
29	30 A	GRN	Moonroof motor
30	20 A	WHT/YEL	Horns, Brake lights, Security control unit
31	20 A	WHT/GRN	Driver's power seat slide motor
32	20 A	WHT	Power door lock control unit
33	10 A	YEL/BLU	PGM-FI main relay
34	15 A	WHT	Condenser fan motor
35	10 A	WHT/GRN	Hazard warning lights, Turn signal/hazard relay
36	15 A	BLU/RED	Front fog lights
37	15 A	WHT/BLU	Ceiling light, Cigarette lighter, Power antenna motor, Power mirror defoggers, Integrated control unit
38	15 A	WHT	Radiator fan motor
39	10 A	WHT/GRN	ECM, Transmission control module (TCM), Clock, Radiator fan control module, Stereo radio/cassette player, Audio power amplifier unit

Fuses

Under-dash Fuse Box

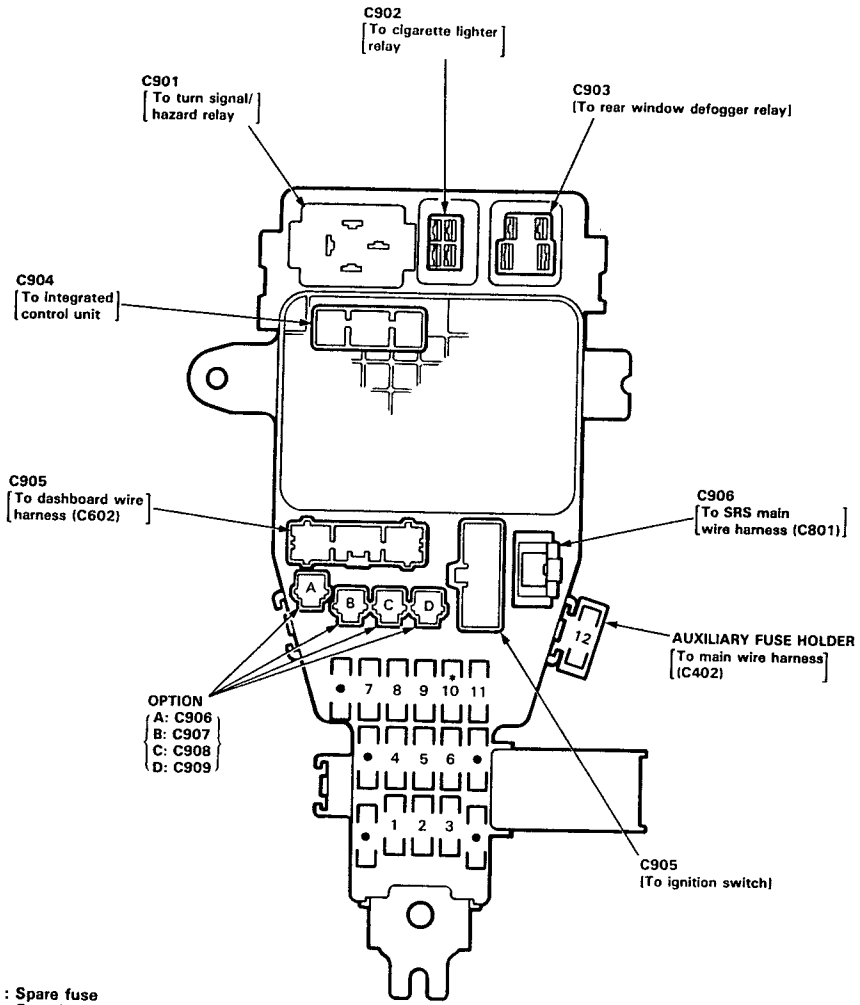

● : Spare fuse
* : Canada

Fuse Number	Amps	Wire color	Component or circuit protected
1	10 A	YEL	Back-up lights, Gauge/indicator lights, Clock, Vehicle speed sensor (VSS)
		Internal connection	Integrated control unit
2	15 A	BLK/YEL	ECM, PGM-FI main relay, ELD unit, Alternator, Radiator fan control module, EGR control solenoid valve
		RED	SRS unit (VA)
3	10 A	PNK	SRS unit (VB)
4	7.5 A	BLK/RED	Cruise control system, Transmission control module (TCM), Security control unit
5	10 A	YEL/RED	Moonroof open relay, Moonroof close relay, Windshield wiper system, Shift lock solenoid (A/T)
6	30 A	GRN/BLK	Windshield wiper motor
7	7.5 A	BLK/YEL	Heater control amplifier, Heater control panel, Blower motor relay, Blower motor high relay, ABS control unit, ABS fail-safe relays, ABS motor relay
		Internal connection	Option B (IG2) connector
8	7.5 A	YEL/BLK	Power mirror actuators, Power mirror defogger relay (Canada), A/C compressor clutch, A/C compressor clutch relay, Radiator fan control module, Driver's seat heater main relay, Front passenger's seat heater main relay
9	7.5 A	BLU/RED	ECM, Gauge (Brake check circuit)
10	7.5 A	YEL/BLK	Daytime running lights control unit (Canada)
11	10 A	YEL/RED	Stereo radio/cassette player, Audio power amplifier unit
		Internal connection	Option A (ACC)connector, Cigarette lighter relay
*12	7.5 A	BLK/YEL	Turn signal/hazard relay

*: AUXILIARY FUSE HOLDER

(cont'd)

Under-dash Fuse/Relay Box (cont'd)

NOTE: View from back side of the under-dash fuse/relay box.

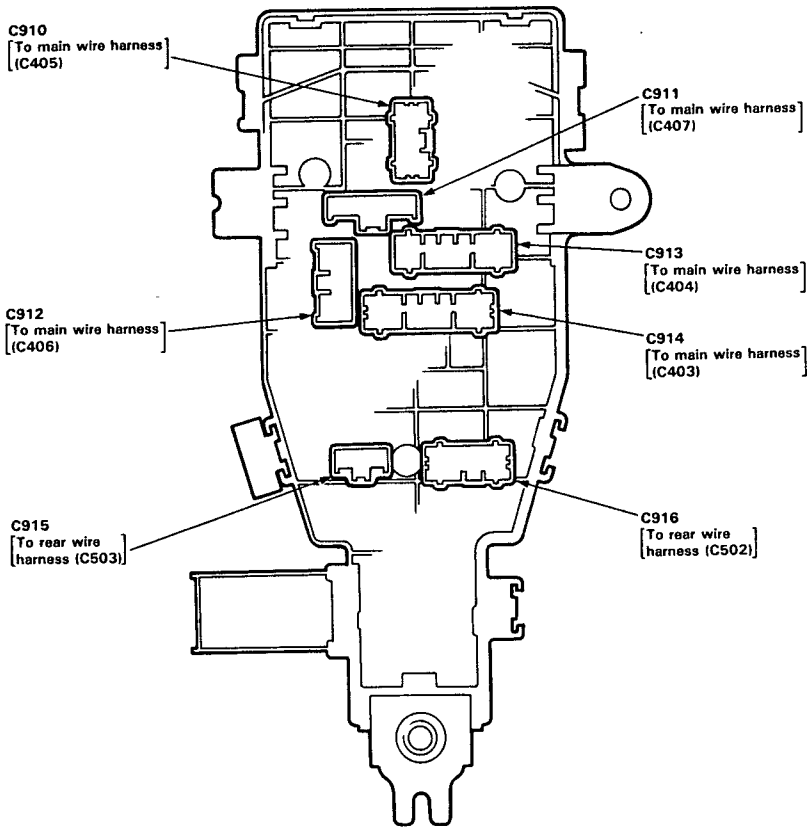

Under-hood ABS Fuse/Relay Box

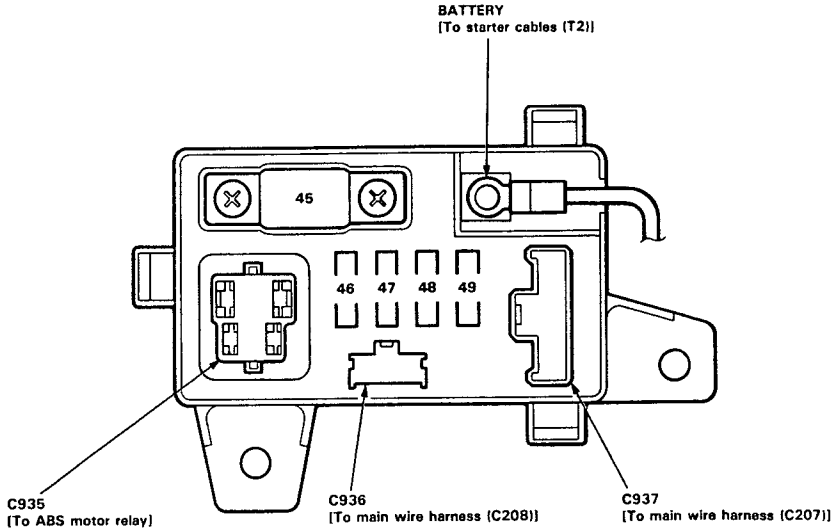

Fuse Number	Amps	Wire color	Component or circuit protected
45	5 0 A	–	ABS motor relay (contacts)
46	7.5 A	WHT/RED	ABS control unit
47	1 5 A	WHT/BLK	ABS control unit (B3)
48	1 5 A	WHT	ABS control unit (B2)
49	1 5 A	WHT/GRN	ABS control unit (B1)

Power Distribution

Circuit Identification

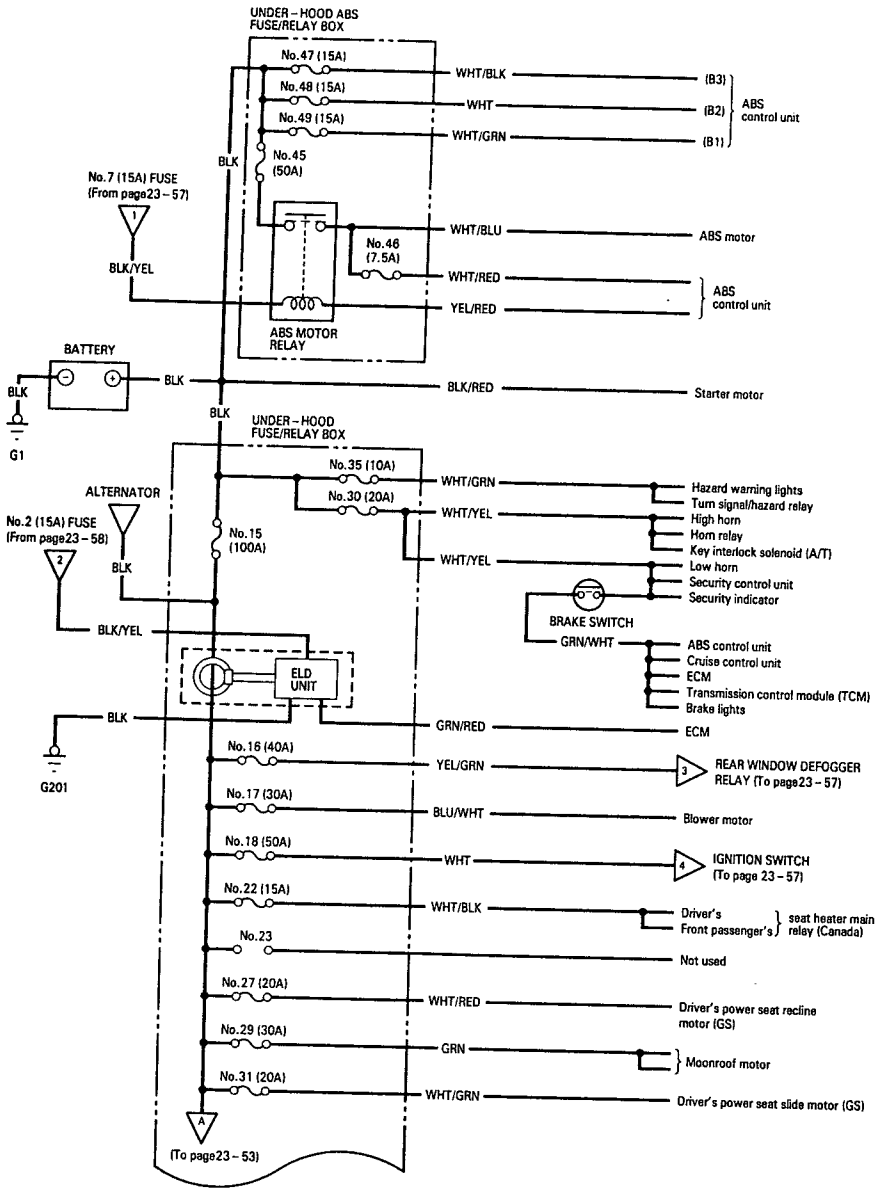

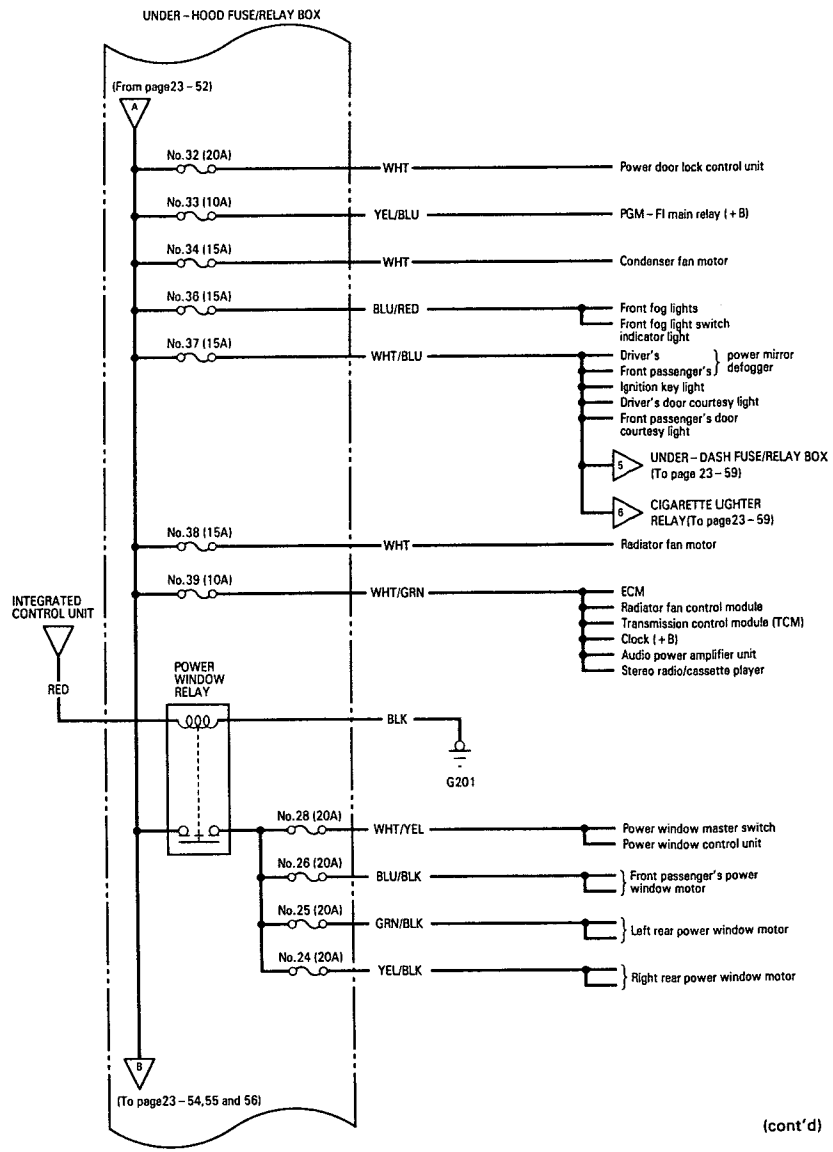

(cont'd)

Power Distribution

Circuit Identification (cont'd)

USA:

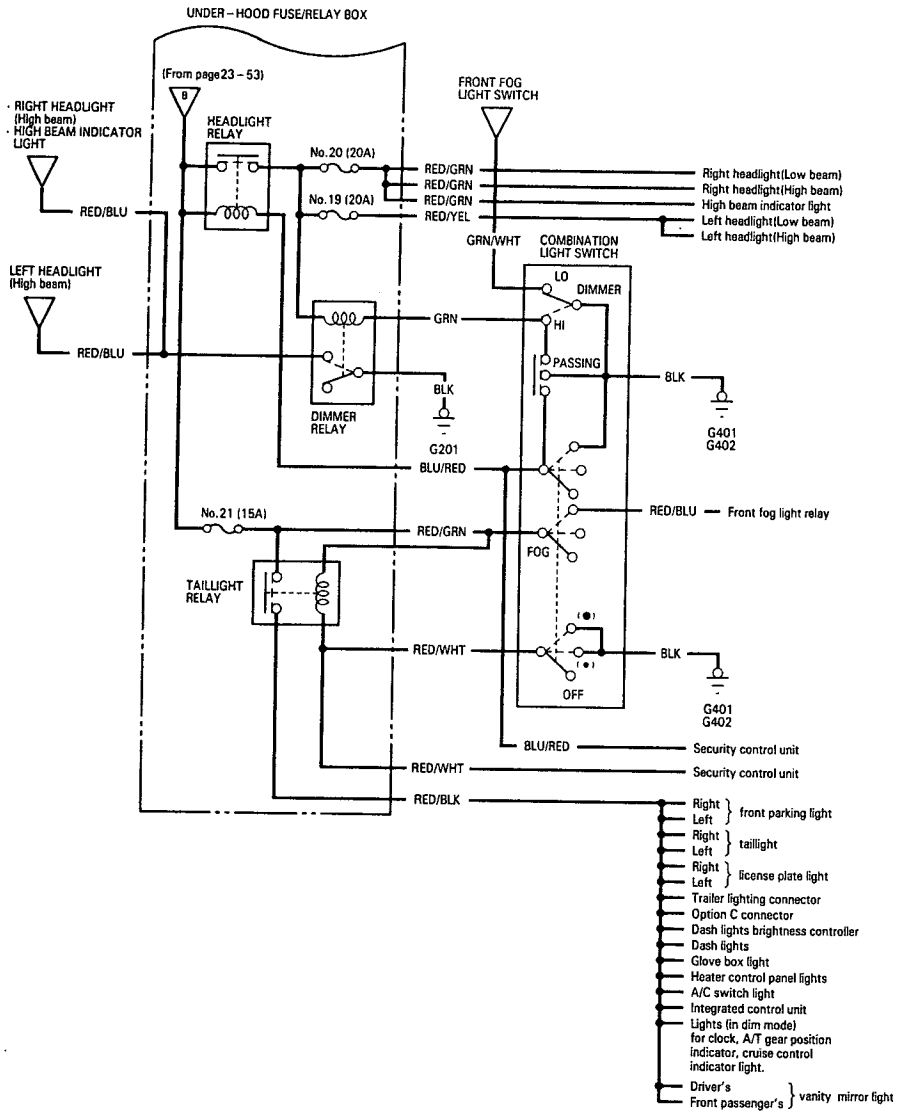

Canada (With security system):

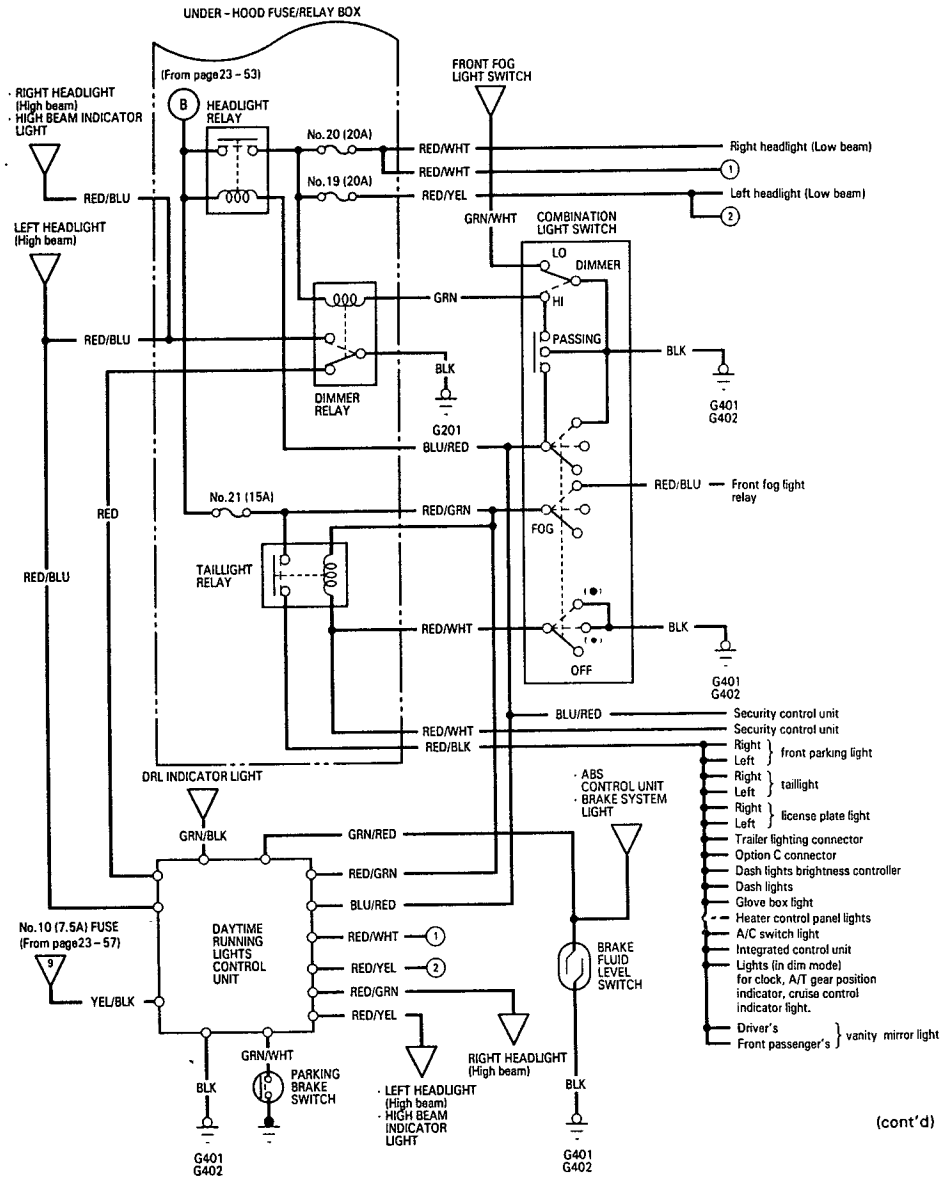

(cont'd)

Power Distribution

Circuit Identification (cont'd)

Canada (Without security system):

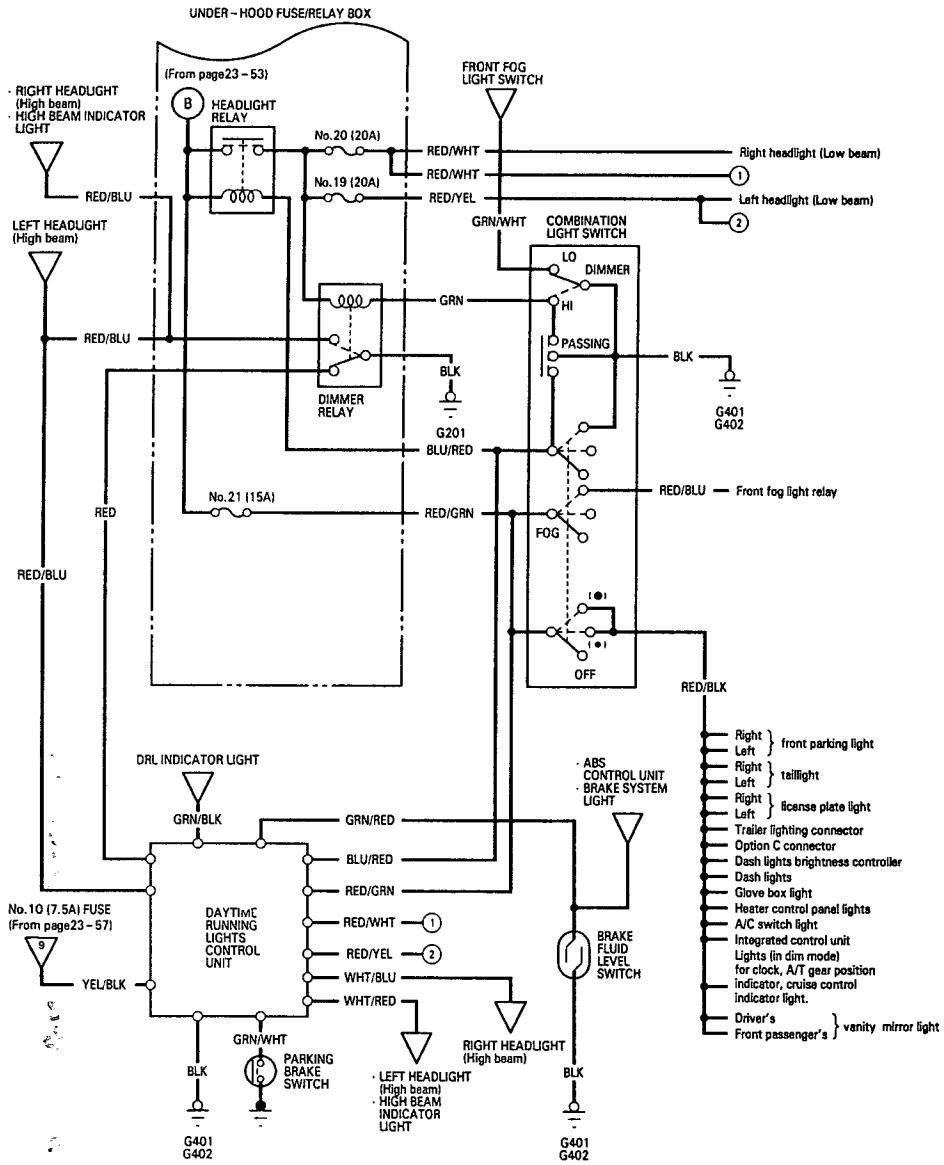

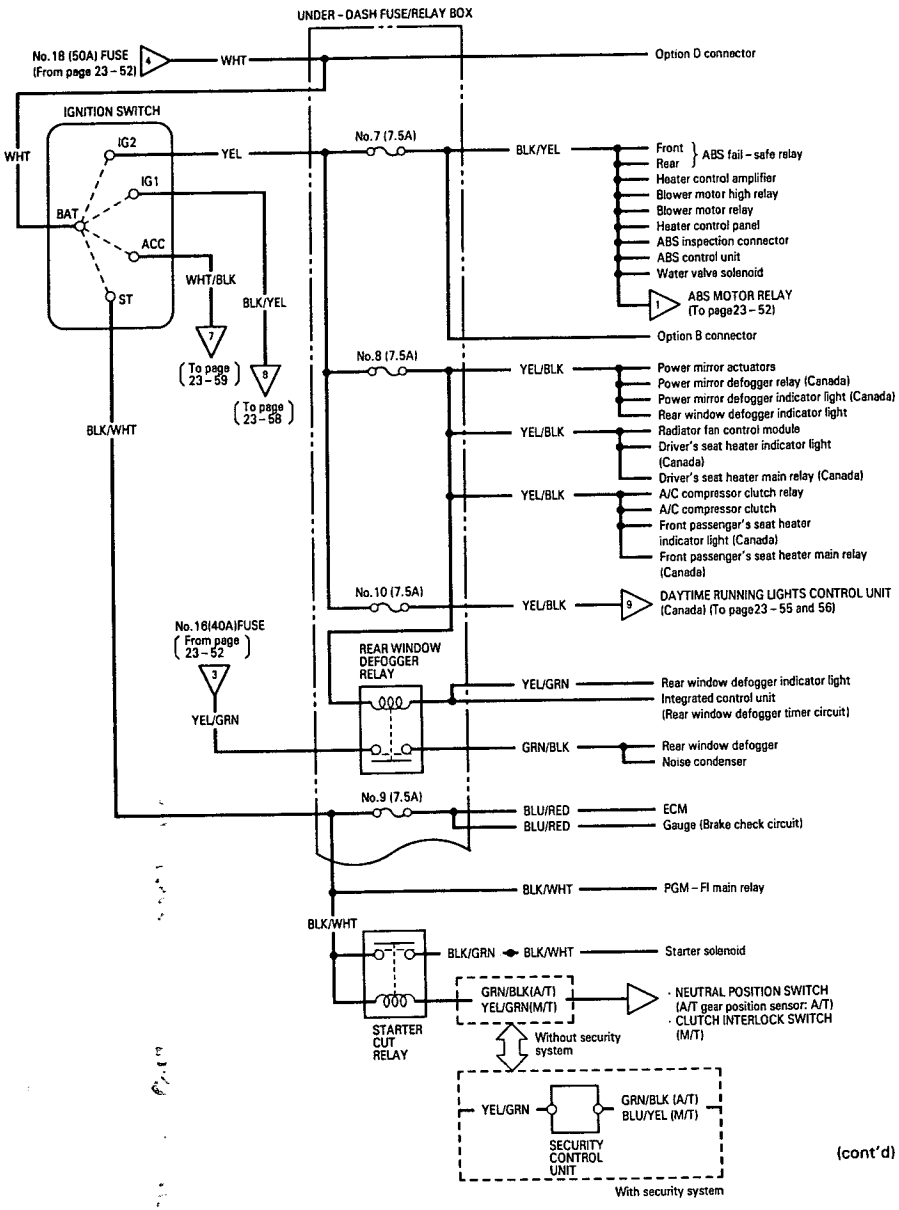

(cont'd)

Power Distribution

Circuit Identification (cont'd)

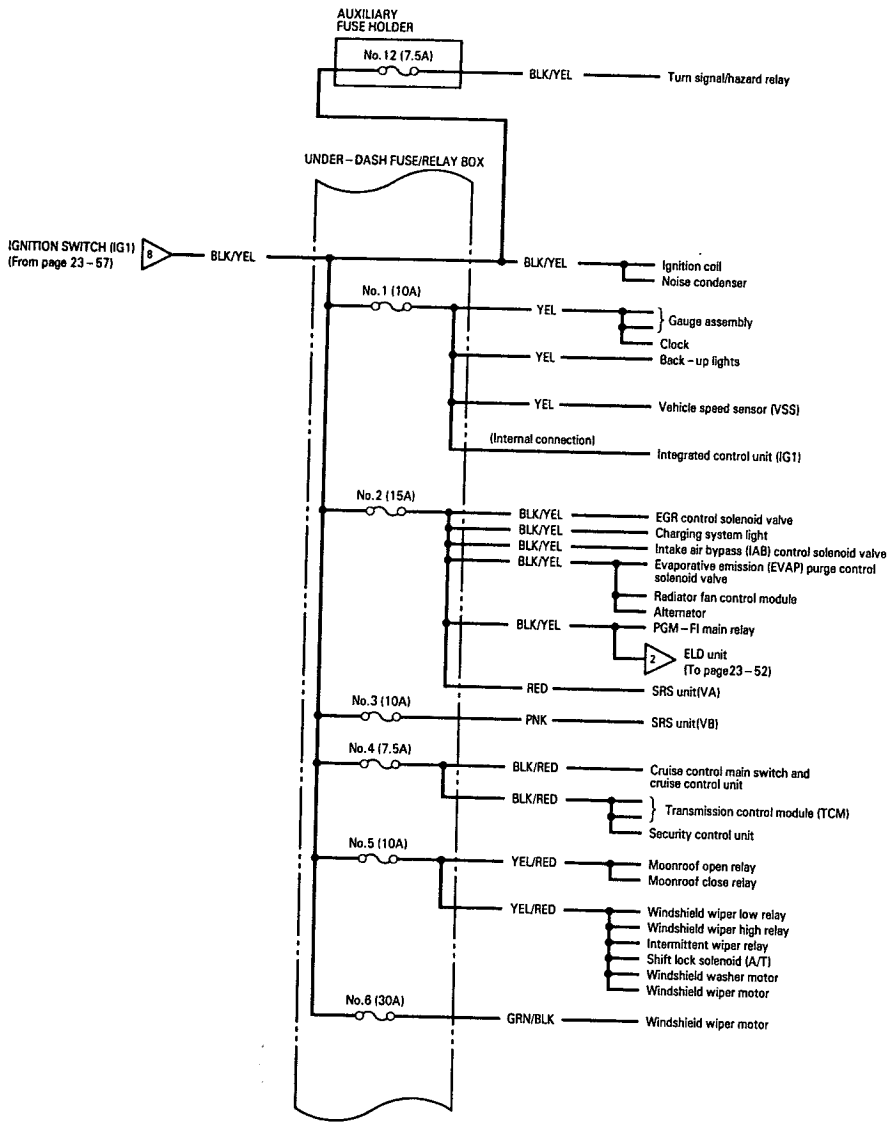

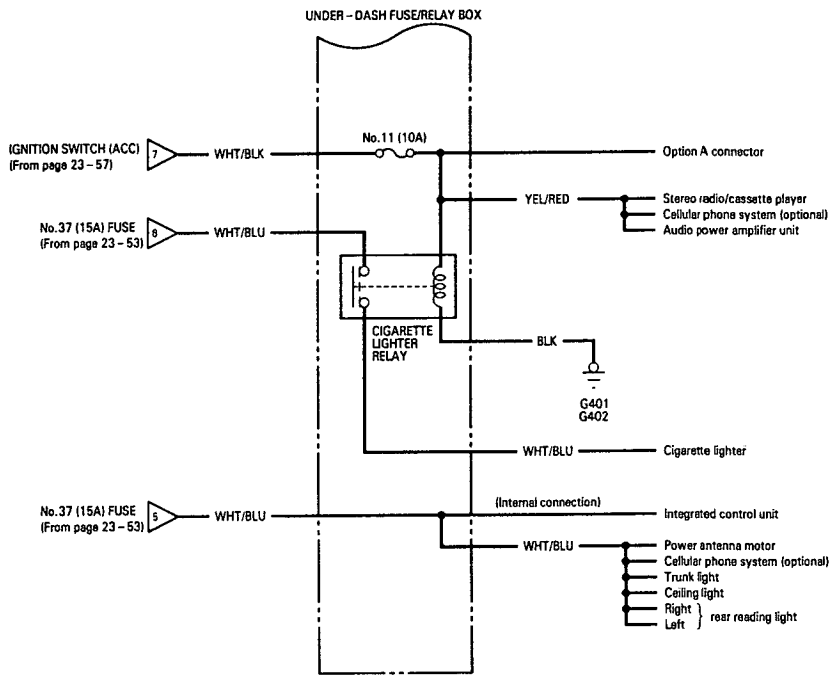

Ground Distribution

Circuit Identification

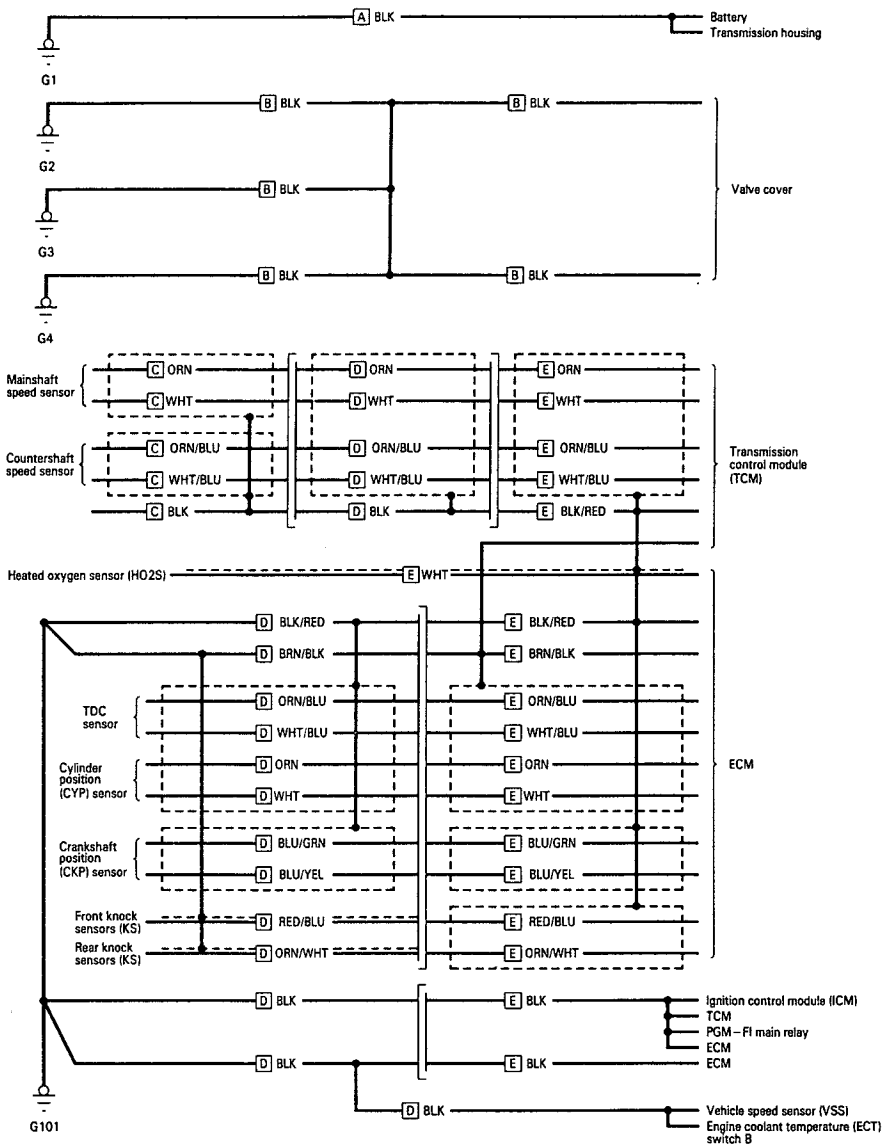

A : Battery ground cables
B : Engine ground cables
C : A/T sub-harness
D : Engine wire harness
E : Main wire harness
- - - - : Shield wire

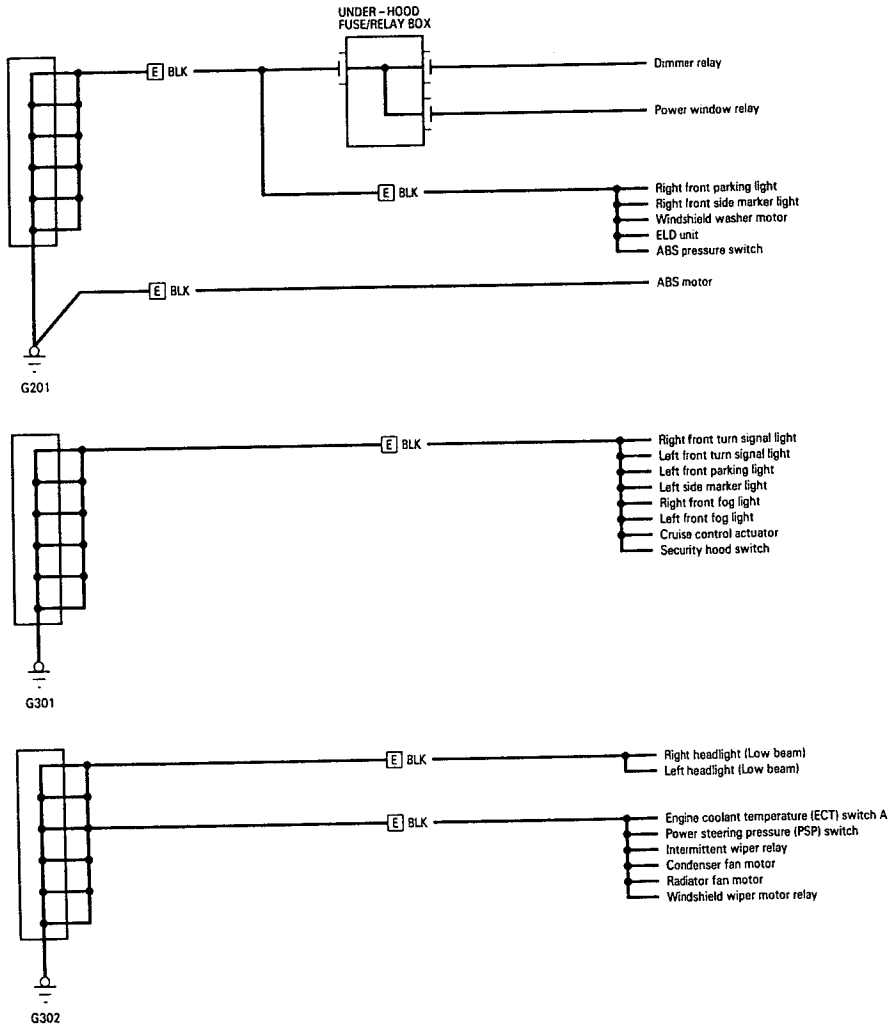

E : Main wire harness

(cont'd)

Ground Distribution

Circuit Identification (cont'd)

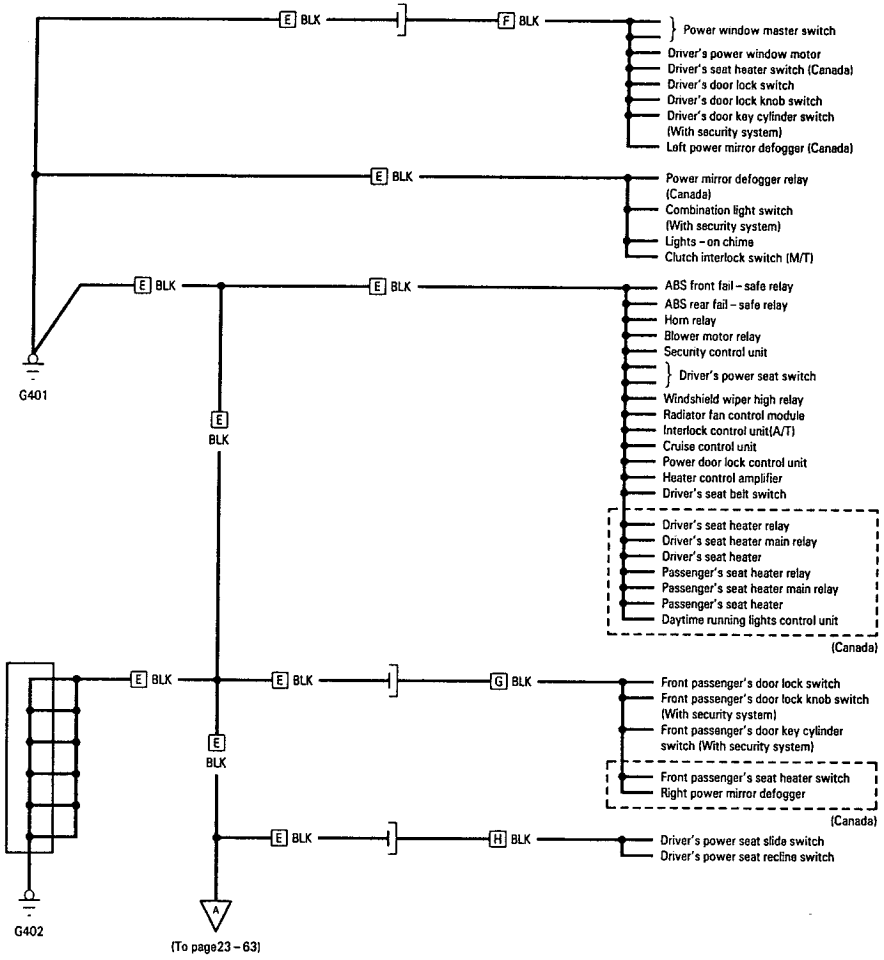

E : Main wire harness
F : Driver's door wire harness
G : Front passenger's door wire harness
H : Driver's power seat wire harness

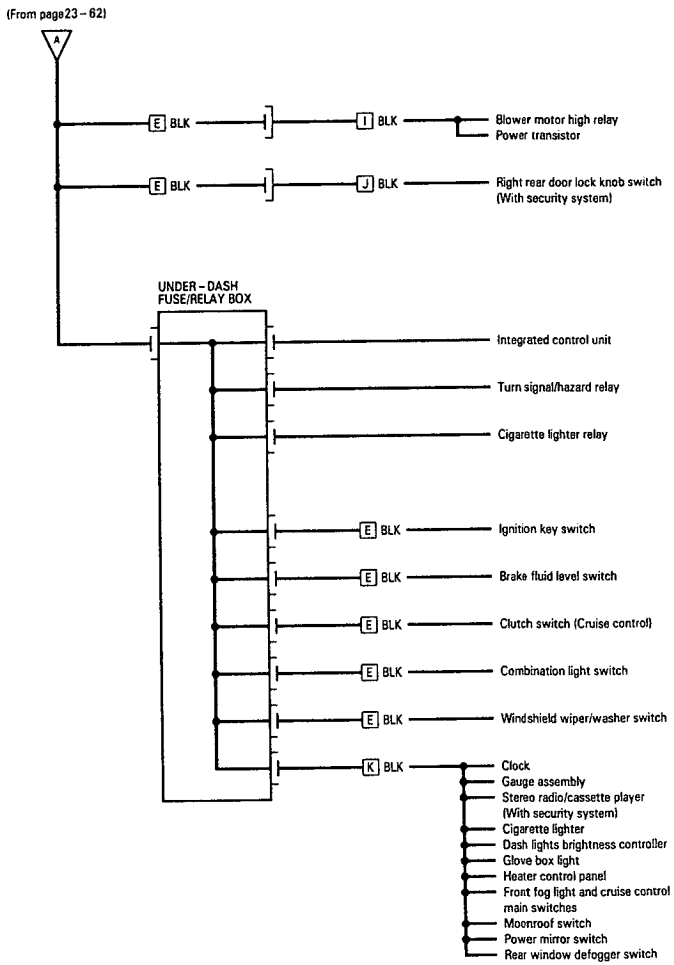

E : Main wire harness
I : Heater sub – harness
J : Right rear door wire harness
K : Dashboard wire harness

(cont'd)

Ground Distribution

Circuit Identification (cont'd)

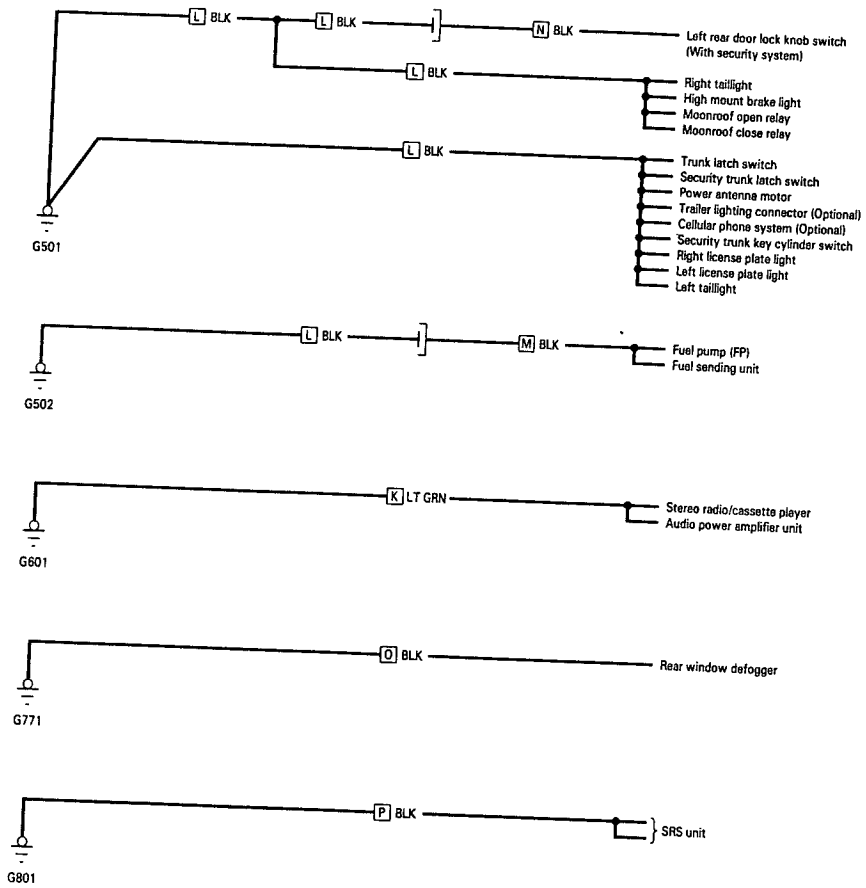

K : Dashboard wire harness
L : Rear wire harness
M : Fuel unit sub-harness
N : Left rear door wire harness
O : Rear window defogger ground wire
P : SRS wire harness

Under-dash Fuse/Relay Box

Removal/Installation

CAUTION:
- **All SRS electrical wiring harnesses are covered with yellow outer insulation.**
- **Before disconnecting the SRS wire harness, install the short connector (s) on the airbag (s).**
- **Replace the entire affected SRS harness assembly if it has an open circuit or damaged wiring.**

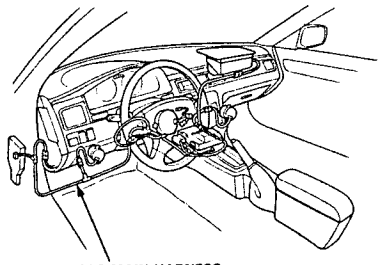

NOTE: The radio may have a coded theft protection circuit. Be sure to get the customer's code number before
- Disconnecting the battery.
- Removing the No.39 (10 A) fuse in the under-hood fuse/relay box.
- Removing the radio.

After service, reconnect power to the radio and turn it on. When the word "CODE" is displayed, enter the customer's 5-digit code to restore radio operation.

1. Disconnect the battery negative cable, then disconnect the positive cable.
2. Remove the access panel from the steering wheel, then remove the short connector (RED).
3. Disconnect the 3-P connector between the driver's airbag and cable reel.

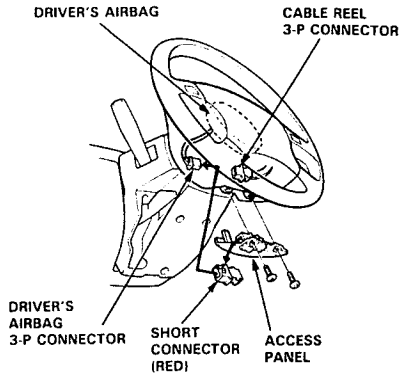

4. Connect the short connector (RED) to the airbag side of the connector.
5. Remove the glove box.
6. Disconnect the 3-P connector between the front passenger's airbag and SRS main harness, and connect the short connector (RED) to the airbag side of the connector.

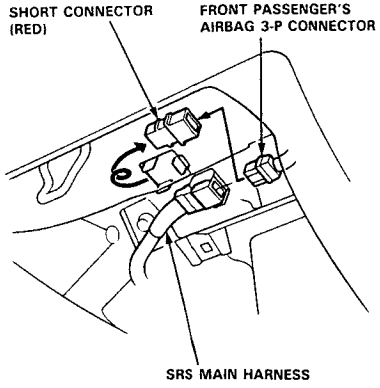

(cont'd)

Under-dash Fuse/Relay Box

Removal/Installation (cont'd)

6. Remove the dashboard lower cover, knee bolster, and dashboard lower frame.

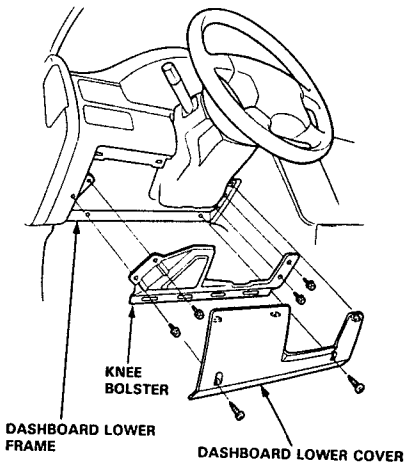

7. Remove the driver's foot rest (see section 20).

8. Remove the door sill molding and left kick panel.

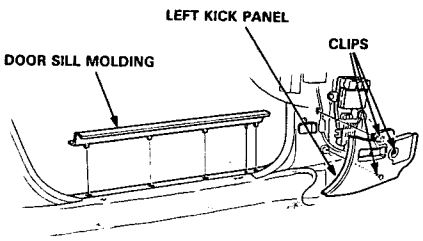

9. Remove the two mounting bolts and pull the under-dash fuse/relay box away from the left kick panel.

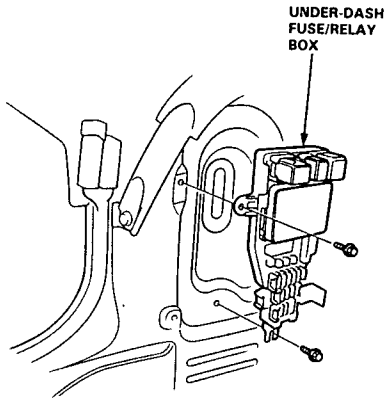

10. Disconnect the under-dash fuse/relay box connectors and take out the under-dash fuse/relay box.

NOTE: The SRS main harness connector is double-locked. To remove it, first lift the connector lid, then press the connector tab down and pull the connector out.

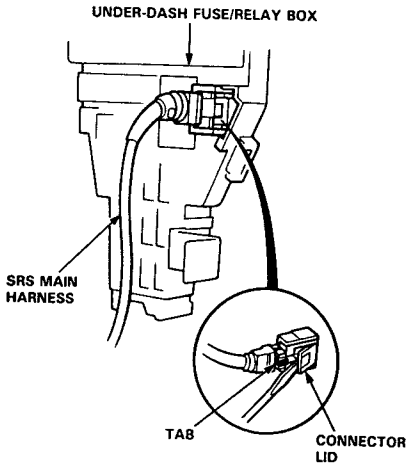

Installation:

1. Reconnect the connectors to the under-dash fuse/relay box.

   NOTE: To reinstall the SRS main harness connector, push it into position until it clicks, then close the connector lid.

2. Install the under-dash fuse/relay box.

3. Reinstall the dashboard lower frame, knee bolster and dashboard lower cover.

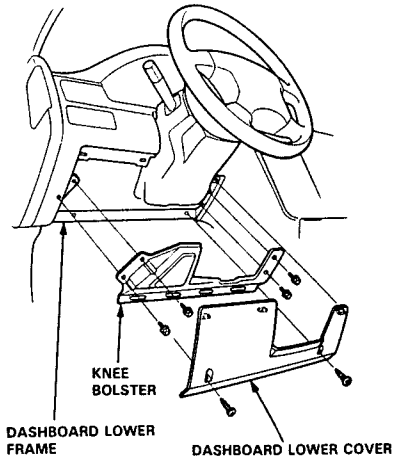

4. Disconnect the short connector (s) (RED) from the airbag(s).

5. Reconnect the airbag 2-P connector (s).

6. Attach the driver's airbag short connector (RED) to the access panel and reinstall the panel.

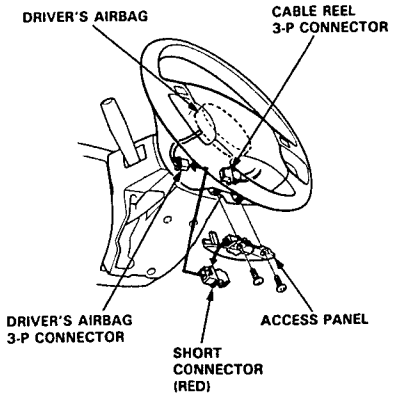

7. Reinstall the glove box.

8. Connect both the negative cable and positive cable to the battery.

9. Confirm that all systems work properly.

Test

⚠ WARNING

- **Battery fluid (electrolyte) contains sulfuric acid. It may cause severe burns if it gets on your skin or in your eyes. Wear protective clothing and a face shield.**
  - **If electrolyte gets on your skin or clothes, rinse it off with water immediately.**
  - **If electrolyte gets in your eyes, flush it out by splashing water in your eyes for at least 15 minutes; call a physician immediately.**
- **A battery gives off hydrogen gas. If ignited, the hydrogen will explode and could crack the battery case and splatter acid on you. Keep sparks, flames, and cigarettes away from the battery.**
- **Overcharging will raise the temperature of the electrolyte. This may force electrolyte to spray out of the battery vents. Follow the charger manufacturer's instructions and charge the battery at a proper rate.**

Use either a JCI or Bear ARBST tester, and follow the manufacturer's procedures. If you don't have one of these computerized testers, follow this conventional test procedure:
To get accurate results, the temperature of the electrolyte must be between 70 °F (21 °C) and 100 °F (38 °C).

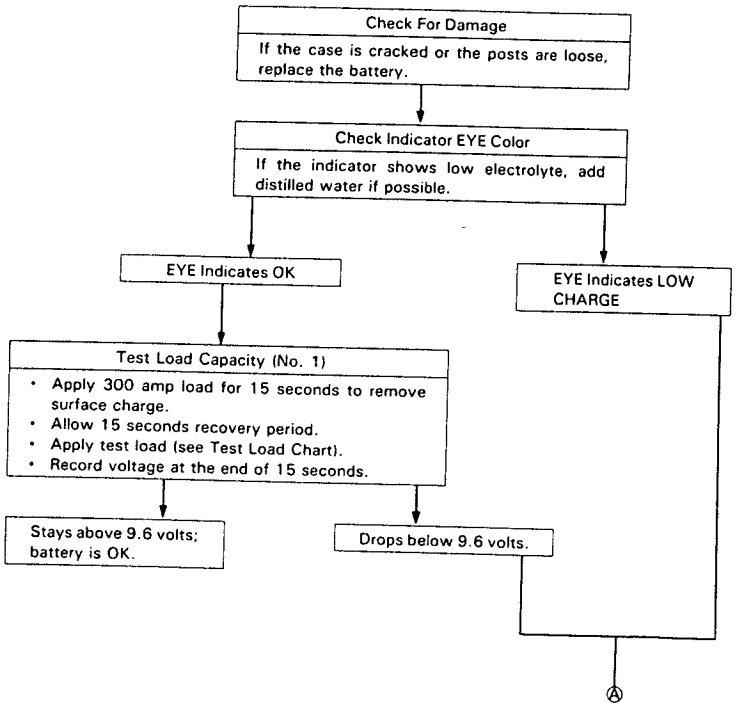

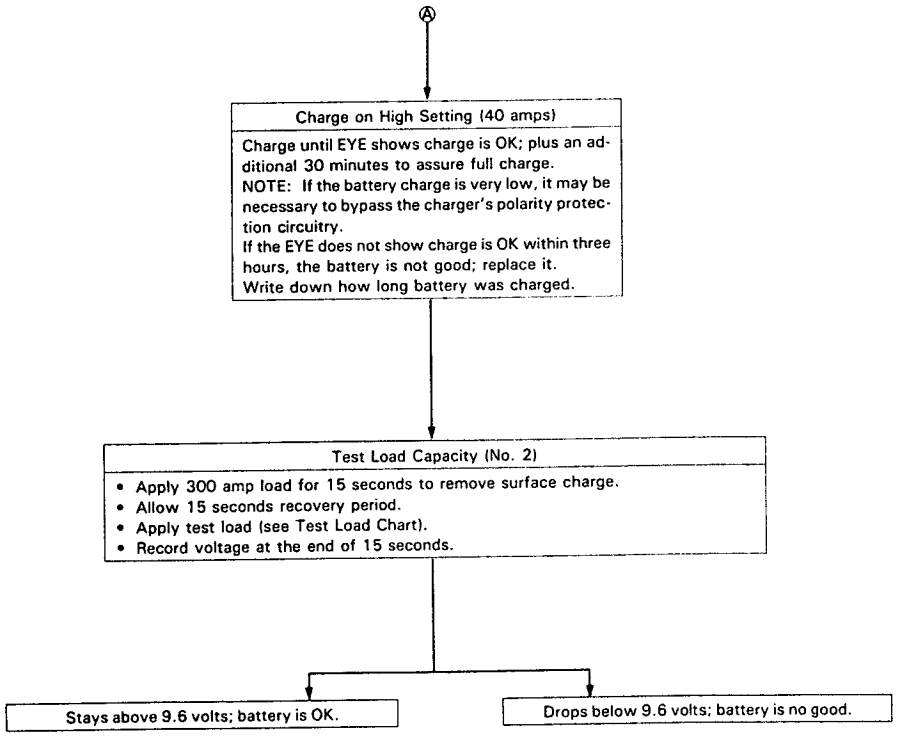

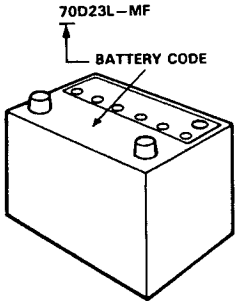

TEST LOAD CHART

Use the test load or 1/2 the cold cranking amps (CCA) printed on the label on the top of the battery. If neither is indicated, use the information below:

BATTERY CODE	COLD CRANKING AMPS (CCA)	LOAD (amps)
80	550	270
70	440	220
55	405	200

Power Relays

Relay Test

NOTE: See page 23-210 for turn signal/hazard relay input test and see page 23-280 for seat heater relay test.

1. Remove the power relay from its socket.

2. Check for continuity between the terminals.
   - There should be continuity between the C and D terminals

   Normally Open-type:
   - There should be continuity between the A and B terminals when power and ground are connected to the C and D terminals.
   - There should be no continuity between the A and B terminals when power is disconnected.

Terminal / Power (C – D)	A	B
Disconnected		
Connected	○	○

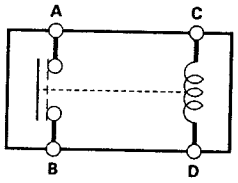

Normally Closed-type:
(Windshield wiper low relay)
- There should be no continuity between the A and B terminals when power and ground are connected to the C and D terminals.
- There should be continuity when power is disconnected.

Terminal / Power (C – D)	A	B
Disconnected	○	○
Connected		

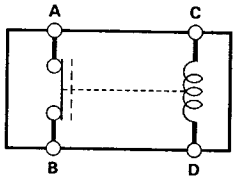

- Horn relay
- Cigarette lighter relay
- Power window relay
- ABS front fail-safe relay
- ABS rear fail-safe relay
- Blower motor relay
- Front fog light relay
- Taillight relay

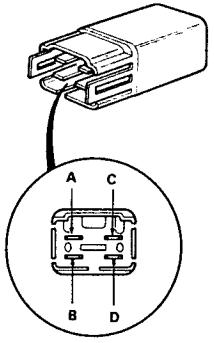

- A/C compressor clutch relay
- Windshield wiper low relay
- Windshield wiper high relay

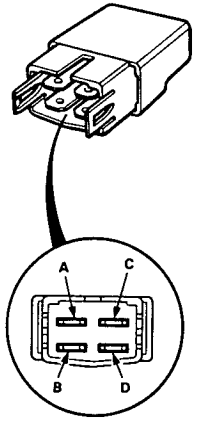

- Blower motor high relay

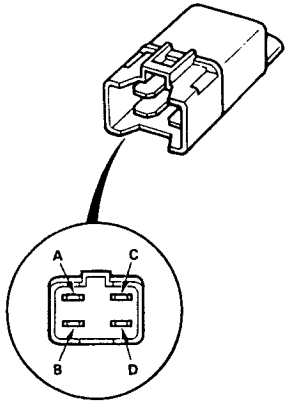

- Seat heater main relay
- Power mirror defogger relay
- Starter cut relay

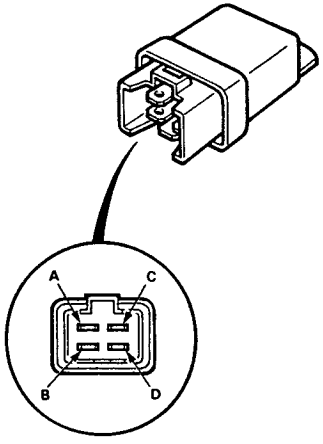

- Condenser fan relay
- Radiator fan relay

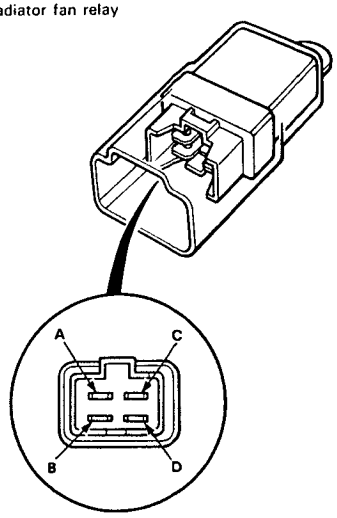

- Headlight relay
- Rear window defogger relay
- ABS motor relay

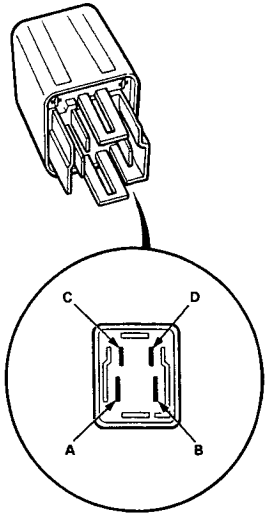

(cont'd)

Power Relays

Relay Test (cont'd)

FIVE-TERMINAL type:

1. Remove the power relay from its socket.
2. Check for continuity between the terminals.
   - There should be continuity between the D and E terminals.
   - There should be continuity between the A and C terminals when power and ground are connected to the D and E terminals.
   - There should be continuity between the B and C terminals when power is disconnected.

Terminal / Power (D – E)	A	B	C
Disconnected		○——	——○
Connected	○——	——	——○

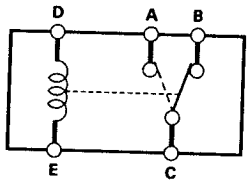

- Dimmer relay

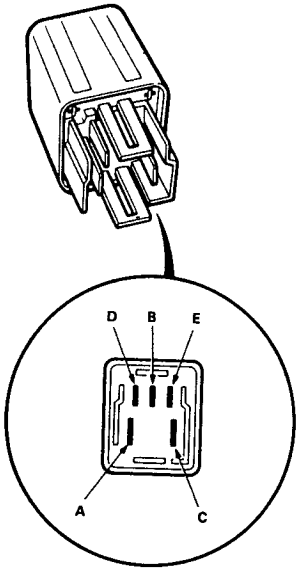

- Intermittent wiper relay

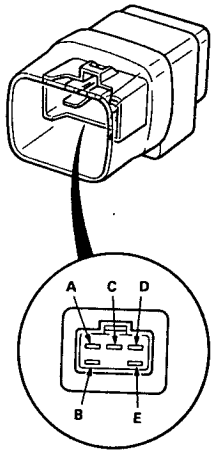

- Moonroof open relay
- Moonroof close relay

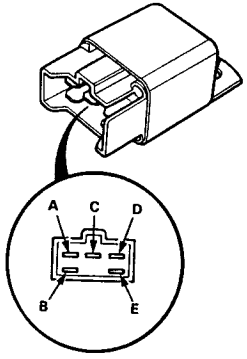

Ignition Switch

Test

CAUTION:

- **All SRS electrical wiring harnesses are covered with yellow outer insulation.**
- **Before disconnecting the SRS wire harness, install the short connector (s) on the airbag (s).**
- **Replace the entire affected SRS harness assembly if it has an open circuit or damaged wiring.**

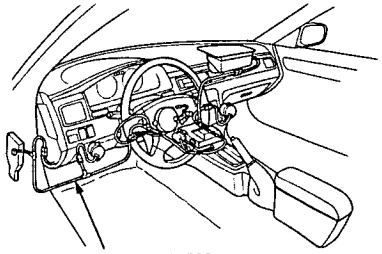

1. Remove the dashboard lower cover, left knee bolster and left kick panel.
2. Disconnect the 7-P connector from the under-dash fuse/relay box.

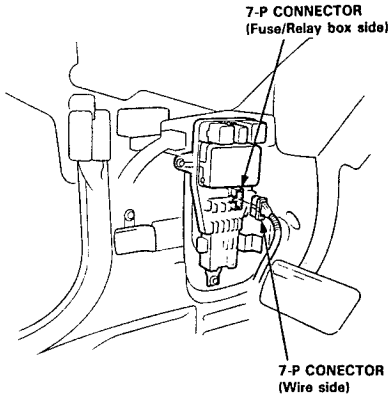

3. Check for continuity between the terminals in each switch position according to the table.

Terminal / Position	WHT/BLK (ACC)	WHT (BAT)	BLK/YEL (IG1)	YEL (IG2)	BLK/WHT (ST)
0					
I	○——	——○			
II	○——	——○	——○	——○	
III		○——	——○	——	——○

4. If the continuity checks do not agree with the table, replace the electrical switch.

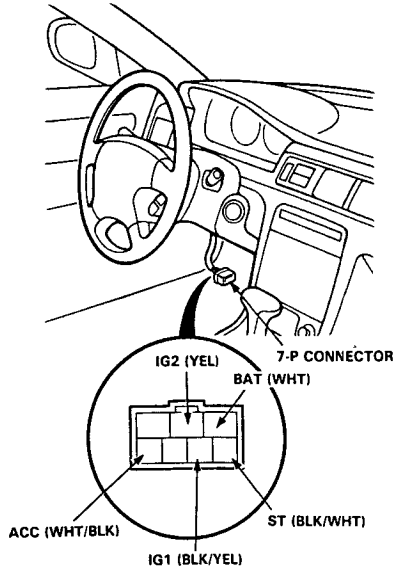

View from wire side

Ignition Switch

Electrical Switch Replacement

CAUTION:
- **All SRS electrical wiring harnesses are covered with yellow outer insulation.**
- **Before disconnecting the SRS wire harness, install the short connector (s) on the airbag (s).**
- **Replace the entire affected SRS harness assembly if it has an open circuit or damaged wiring.**

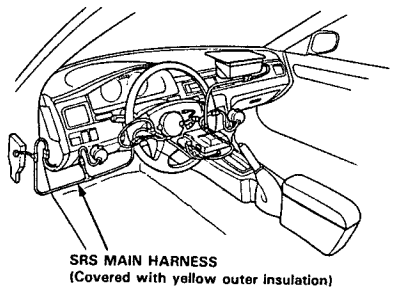

1. Disconnect the battery negative cable, then disconnect the positive cable.
2. Remove the dashboard lower cover and knee bolster (see page 23-66).
3. Disconnect the 7-P connector from the under-dash fuse/relay box.

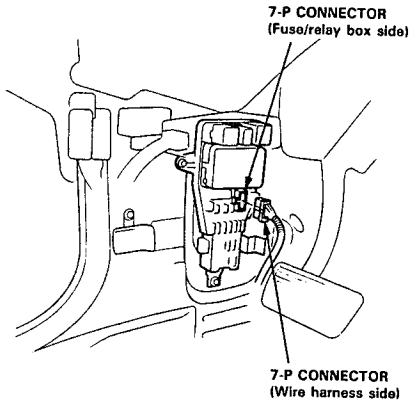

4. Remove the steering column covers.

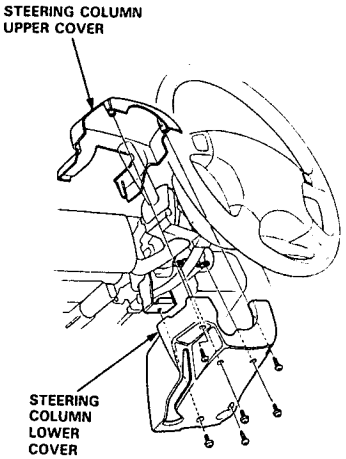

5. Insert the key and turn it to "0".
6. Remove the two screws and replace the electrical switch.

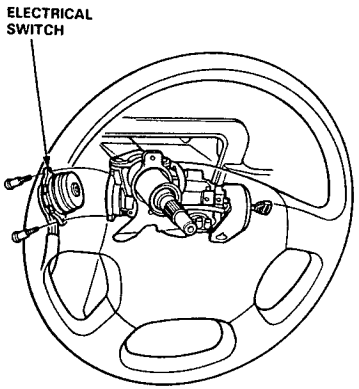

Steering Lock Replacement

CAUTION:
- **All SRS electrical wiring harnesses are covered with yellow outer insulation.**
- **Before disconnecting the SRS wire harness, install the short connector (s) on the airbag (s).**
- **Replace the entire affected SRS harness assembly if it has an open circuit or damaged wiring.**

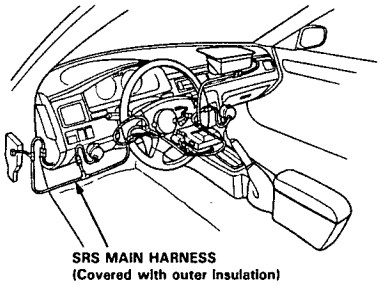

NOTE: The radio may have a coded theft protection circuit. Be sure to get the customer's code number before
- Disconnecting the battery.
- Removing the No.39 (10 A) fuse in the under-hood fuse/relay box.
- Removing the radio.

After service, reconnect power to the radio and turn it on. When the word "CODE" is displayed, enter the customer's 5-digit code to restore radio operation.

1. Disconnect the battery negative cable, then disconnect the positive cable.
2. Remove the dashboard lower cover and knee bolster (see page 23-66).
3. Disconnect the 7-P connector from the under-dash fuse/relay box.
4. Disconnect the 8-P connector (with A/T) from the main wire harness.
5. Remove the steering column covers.

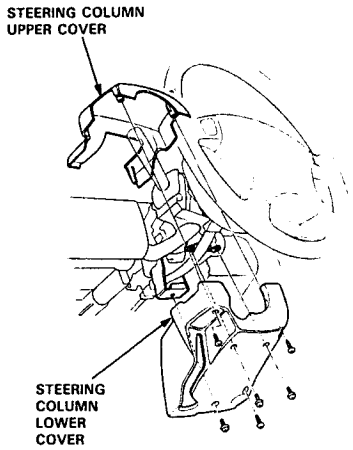

6. Remove the instrument panel.

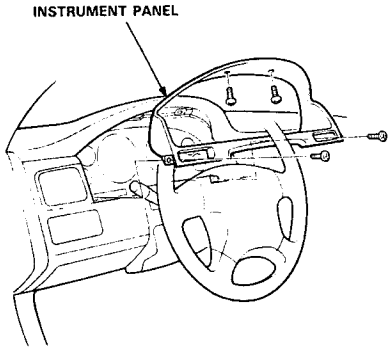

(cont'd)

Ignition Switch

Steering Lock Replacement (cont'd)

7. Center punch each of the two shear bolts and drill their heads off with a 5 mm (3/16 in.) drill bit.

   CAUTION: Do not damage the switch body when removing the shear bolts.

8. Remove the shear bolts from the switch body.

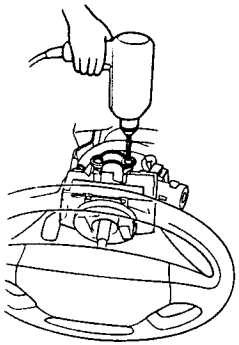

9. Install the new ignition switch without the key inserted.

10. Loosely tighten the new shear bolts.

11. Insert the ignition key and check for proper operation of the steering wheel lock and that the ignition key turns freely.

12. Tighten the shear bolts until the hex heads twist off.

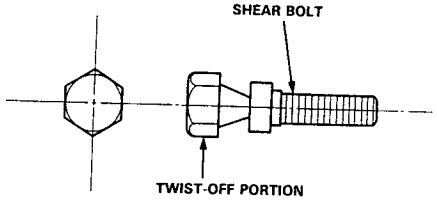

Starting System

Component Location Index

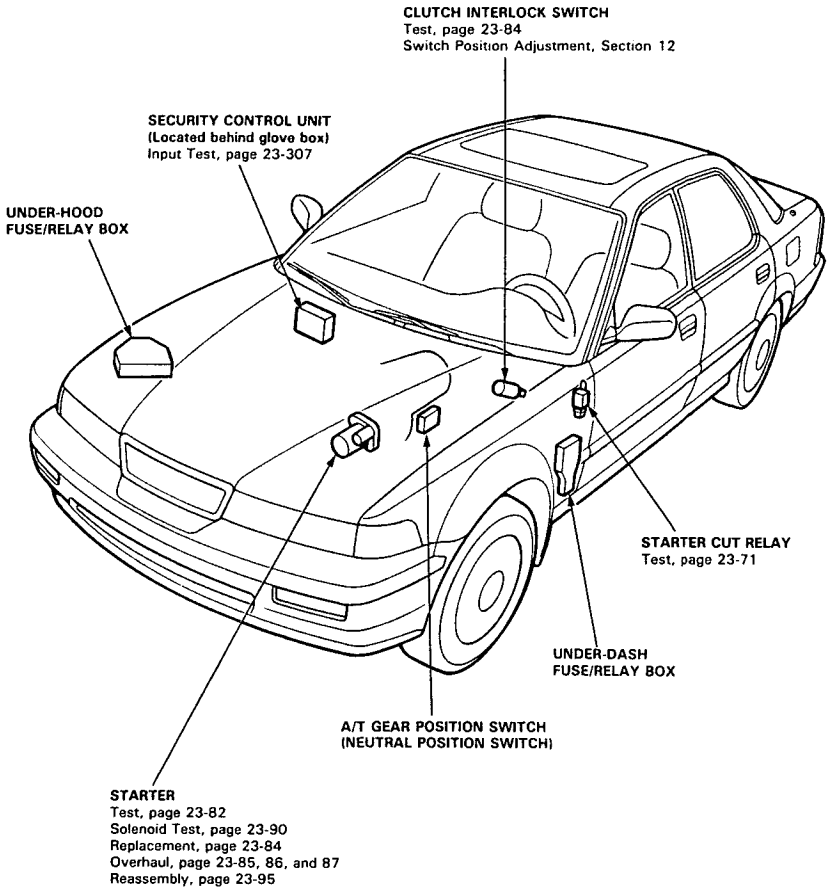

Starting System

Description

Planetary Gear Reduction Type:

One of three different gear reduction type starters may have originally been installed. In two of them, the reduction is done with a planetary gear mechanism.

The mechanism has an internal sun gear, three planetary gears, and an armature shaft. When the armature shaft rotates 4.38 turns, the pinion gear rotates one turn in the same direction and the output torque becomes 4.38 times greater than the motor torque.

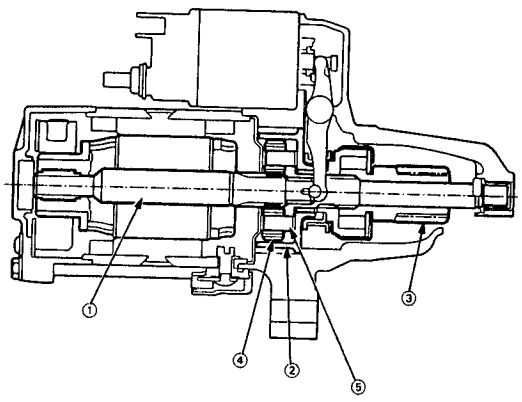

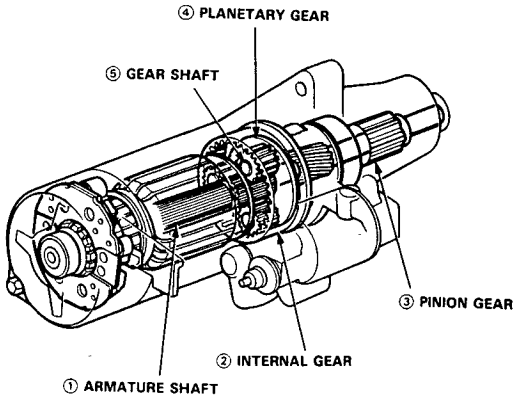

Starter Interlock System (M/T):
The starter interlock system prevents the engine from starting unless the clutch pedal is fully depressed.

The clutch interlock switch turns on at the position where the clutch disengages: 0.59-0.79 in (15-20 mm) from the fully depressed position.

NOTE: Full stroke of clutch pedal is 5.51-5.59 in (140-150 mm) from the fully released position.

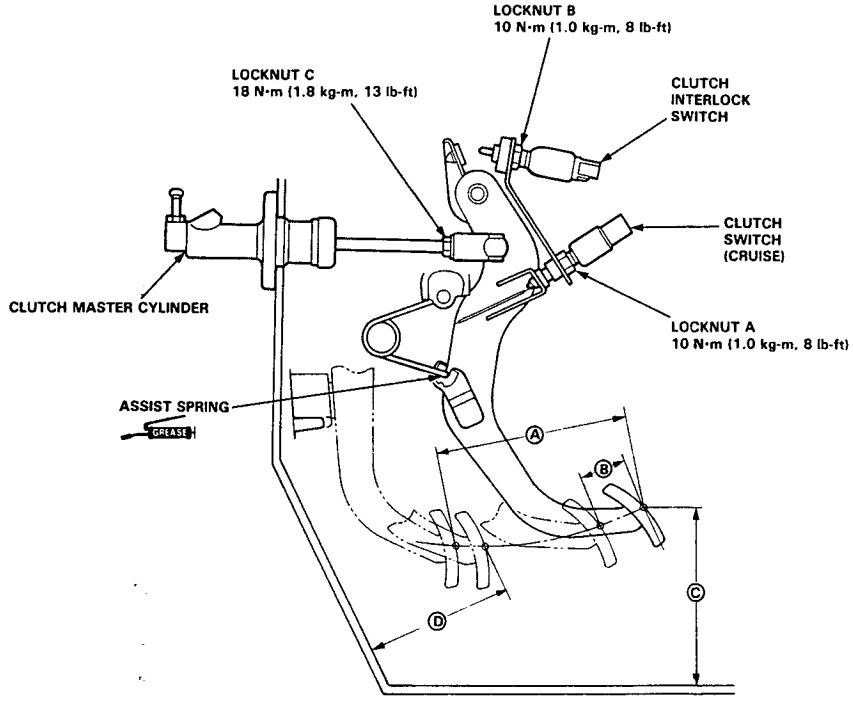

Ⓐ (FULL STROKE): 5.51–5.91 in (140–150 mm)
Ⓑ TOTAL PEDAL FREE PLAY: 0.59–0.79 in (15–20 mm) include the pedal play 0.04–0.28 in (1.0–7.0 mm)
Ⓒ (PEDAL HEIGHT): 8.17 in (207.5 mm) to the floor panel.
Ⓓ (PEDAL DISENGAGEMENT HEIGHT): 4.58 in (116.4 mm) minimum to the floor panel.

Starting System

Circuit Diagram (With Security System)

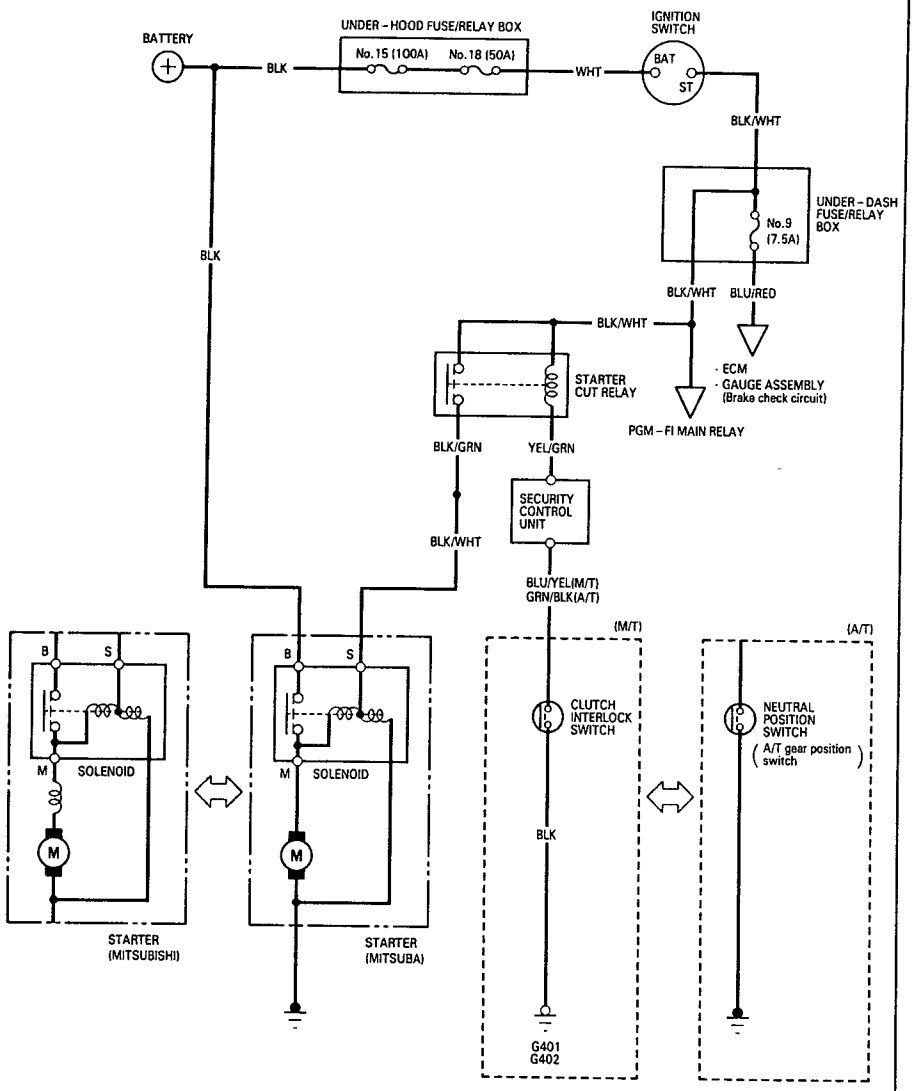

Circuit Diagram(Without Security System)

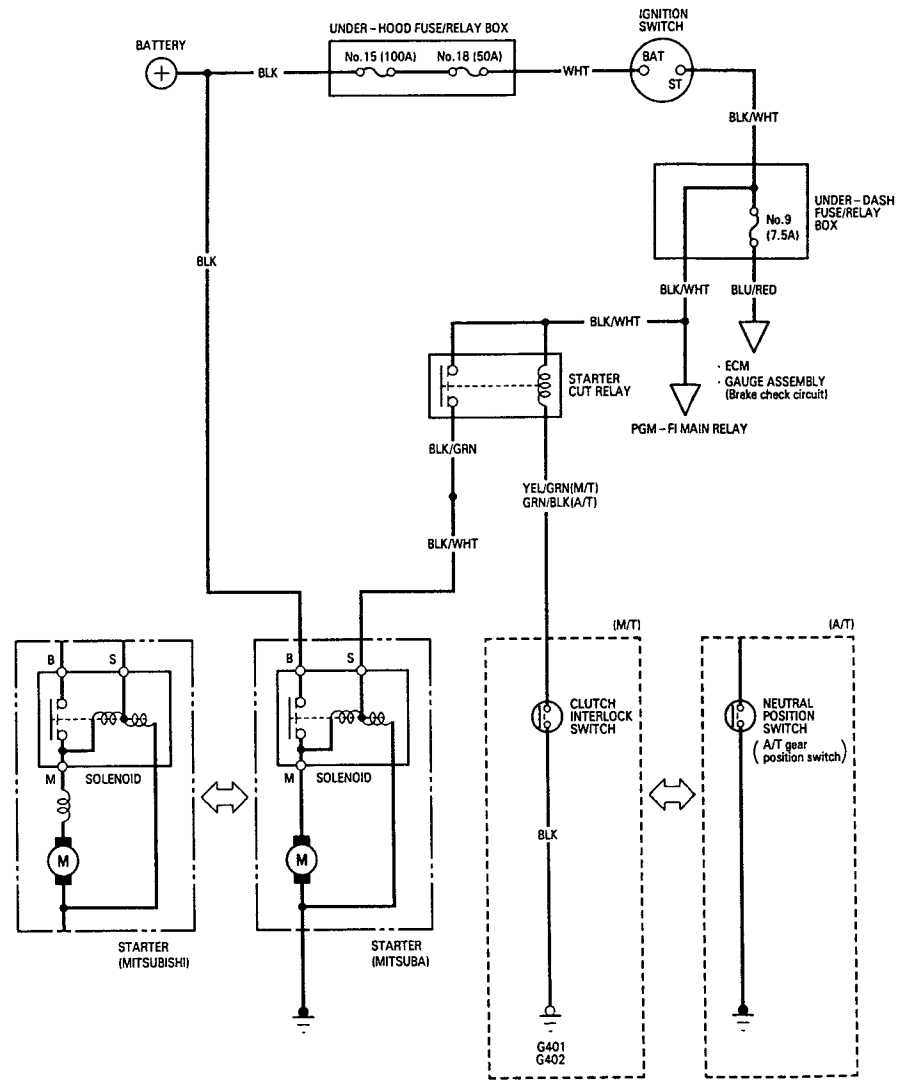

Starting System

Starter Test

NOTE: The air temperature must be between 59 and 100 °F (15 and 38 °C) before testing.

Recommended Procedure:

- Use a starter system tester.
- Connect and operate the equipment in accordance with the manufacturer's instructions.
- Test and troubleshoot as described.

Alternate Procedure:

- Use the following equipment:
  - Ammeter, 0-400 A
  - Voltmeter, 0-20 V (accurate within 0.1 volt)
  - Tachometer, 0-1200 rpm
- Hook up voltmeter and ammeter as shown.

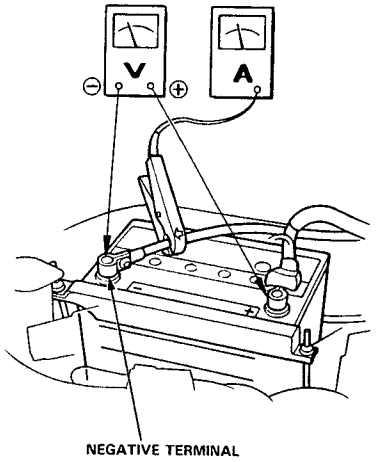

NOTE: After this test, or any subsequent repair, reset the ECM to clear any codes (see section 11).

1. Disconnect the 4-P connector from the ignition coil.

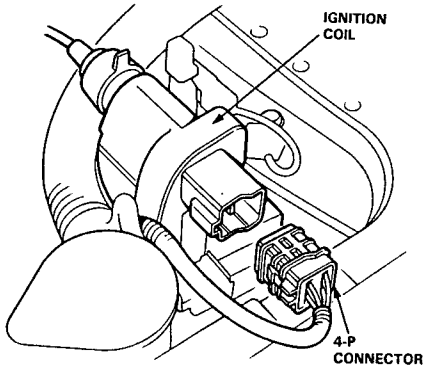

2. Check the starter engagement:
   Press the clutch pedal all the way in (M/T), and turn the ignition switch to "Start". The starter should crank the engine.

   NOTE: On cars equipped with manual transmission, the engine will not crank unless the clutch pedal is fully depressed.

   - If the starter does not crank the engine, check the battery, battery positive cable, ground, and the wire connections for looseness and corrosion.
   - Test again.
     If the starter still does not crank the engine, bypass the ignition switch circuit as follows (make sure the transmission is in neutral):
     Unplug the connector (BLK/WHT wire and solenoid terminal wire) from the starter. Connect a jumper wire from the battery positive (+) terminal to the solenoid terminal. The starter should crank the engine.

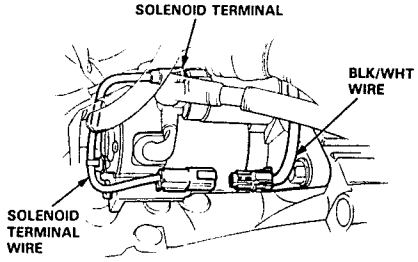

   - If the starter still does not crank the engine, remove the starter and diagnose its internal problems.
   - If the starter cranks the engine, check for an open in the BLK/WHT wire circuit between the starter and ignition switch, and connectors.
     Check the ignition switch.
     On cars with automatic transmission, check the A/T gear position switch (neutral position switch) and connector.
     On cars with manual transmission, check the starter cut relay, clutch interlock switch, and connectors.

   NOTE: Check the No. 18 (50 A) fuse in the underhood fuse/relay box and the starter cut relay, and inspect the security alarm system.

3. Check for wear or damage:
   The starter should crank the engine smoothly and steadily.

   If the starter engages, but cranks the engine erratically, remove the starter motor. Inspect the starter, drive gear and flywheel ring gear for damage.
   Check the drive gear overrunning clutch for binding or slipping when the armature is rotated with the drive gear held. Replace the gears if damaged.

4. Check cranking voltage and current draw:
   Voltage should be no less than 8.0 volts.
   Current should be no more than 350 amperes for 1.6 KW Mitsuba, 400 amperes for 2.0 KW Mitsuba, and 2.0 KW Mitsubishi.

   If voltage is too low, or current draw too high, check for:

   - Fully charged battery.
   - Open circuit in starter armature commutator segments.
   - Starter armature dragging.
   - Shorted armature winding.
   - Excessive drag in engine.

5. Check cranking rpm:
   Engine speed during cranking should be above 100 rpm.

   If speed is too low, check for:

   - Loose battery or starter terminals.
   - Excessively worn starter brushes.
   - Open circuit in commutator segments.
   - Dirty or damaged helical spline or drive gear.
   - Defective drive gear overrunning clutch.

6. Check the starter disengagement:
   Press the clutch pedal all the way in (M/T), turn the ignition switch to "III" and release to "II". The starter drive gear should disengage from the flywheel ring gear.

   If the drive gear hangs up on the flywheel ring gear, check for:

- Solenoid plunger and switch malfunction.
- Dirty drive gear assembly or damaged overrunning clutch.

Clutch Interlock Switch Test

1. Remove the dashboard lower cover and knee bolster, then disconnect the 2-P connector from the clutch interlock switch.

2. Check for continuity between the terminals according to the table.

Terminal / Clutch Pedal	A	B
RELEASED		
PUSHED	○	○

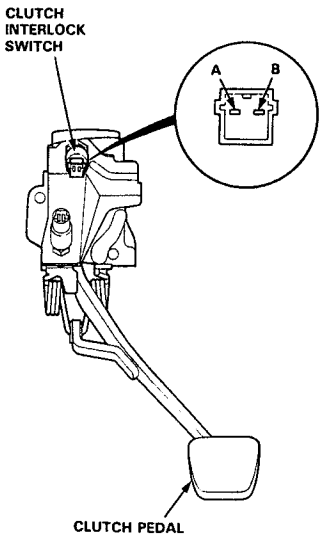

3. If necessary, replace the switch or adjust the switch position (see section 12).

Starter Replacement

NOTE: The radio may have a coded theft protection circuit. Be sure to get the customer's code number before
- Disconnecting the battery.
- Removing the No.39 (10 A) fuse in the under-hood fuse/relay box.
- Removing the radio.

After service, reconnect power to the radio and turn it on. When the word "CODE" is displayed, enter the customer's 5-digit code to restore radio operation.

1. Disconnect the battery negative cable then disconnect the positive cable.

2. Remove the rear intake manifold bracket.

3. Disconnect the starter cable from the B terminal on the solenoid, then the BLK/WHT wire from the S terminal wire.

4. Remove the two bolts holding the starter, then remove the starter.

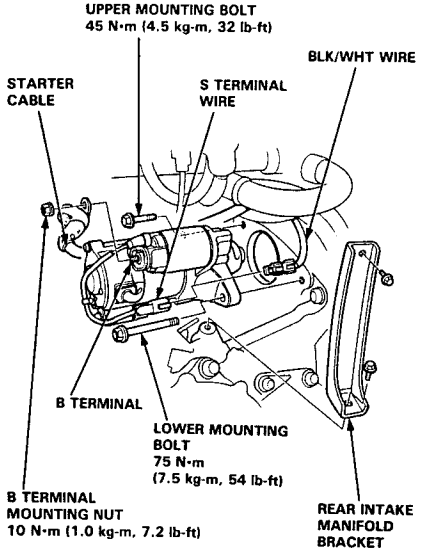

Starter Overhaul (Gear Reduction 1.6kw Mitsuba)

CAUTION: Disconnect the battery ground cables before removing the starter.

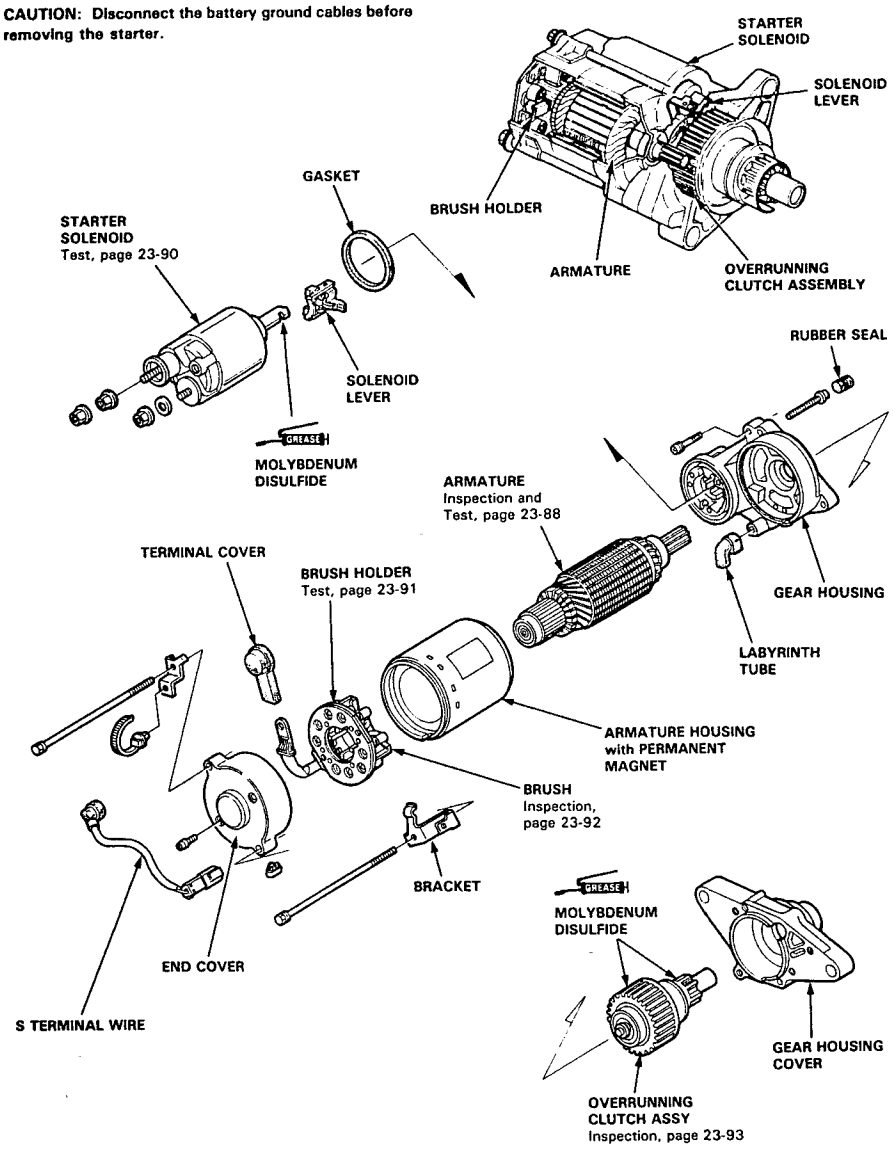

Starter Overhaul (Planetary Gear Reduction 2.0 kw Mitsuba)

CAUTION: Disconnect the battery ground cables before removing the starter.

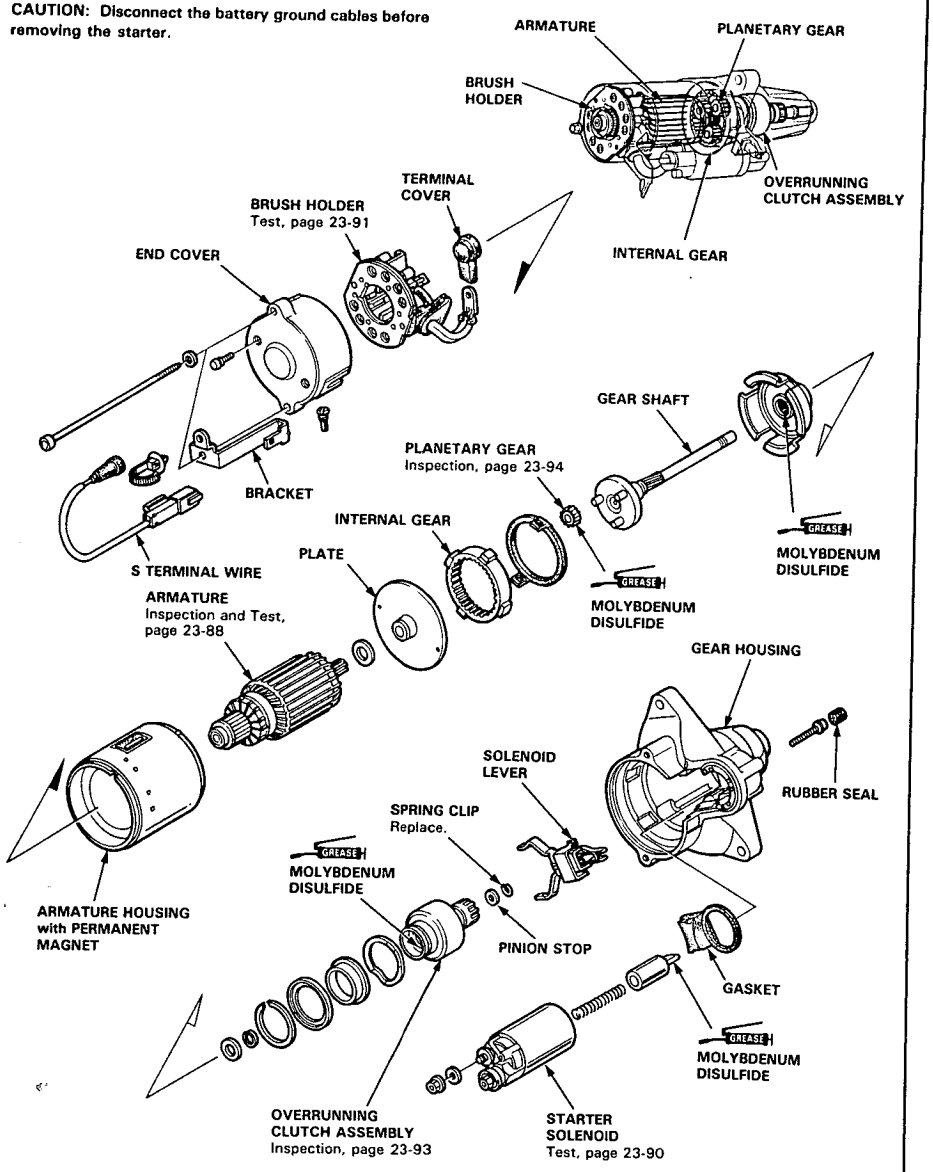

Starter Overhaul (Planetary Gear Reduction 2.0 kw Mitsubishi)

CAUTION: Disconnect the battery ground cables before removing the starter.

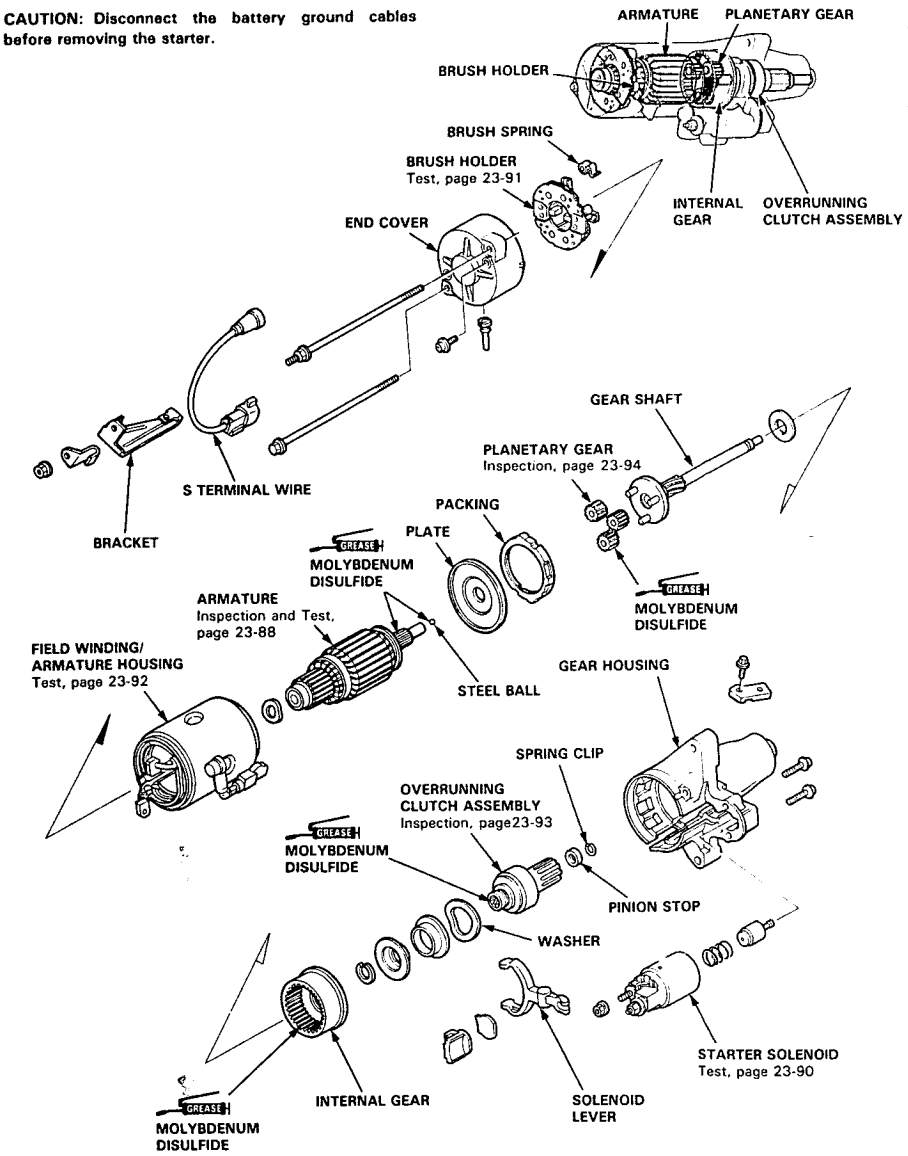

Armature Inspection and Test

1. Inspect the armature for wear or damage due to contact with the field coil magnets.

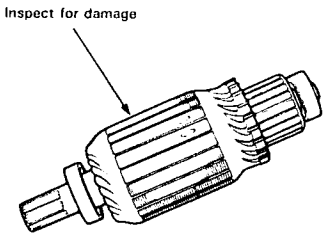

2. A dirty or burnt commutator surface may be resurfaced with emery cloth or a lathe within the following specifications.

Commutator Diameter

	Standard (NEW)	Service Limit
Mitsubishi (2.0 KW)	31.9–32.1 mm (1.256–1.263 in)	31.5 mm (1.24 in)
Mitsuba (2.0 KW)	32.0–32.1 (1.259–1.263 in)	31.5 mm (1.24 in)
Mituba (1.6 KW)	28.0–28.1 mm (1.102–1.106 in)	27.5 mm (1.083 in)

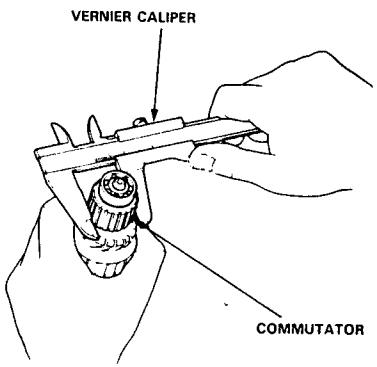

Commutator Runout

	Standard (NEW)	Service Limit
Mitsubishi (2.0 KW)	0.05 mm (0.002 in)	0.1 mm (0.004 in)
Mitsuba (2.0 KW)	0.02 mm (0.0008 in)	0.05 mm (0.002 in)
Mituba (1.6 KW)	0.02 mm (0.0008 in)	0.05 mm (0.002 in)

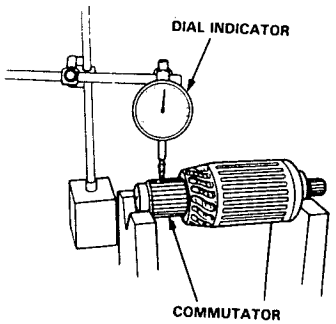

3. If the commutator runout and diameter are within limits, check the commutator for damage or for carbon dust or brass chips between the segments.

4. If the surface is dirty, recondition it with a #500 or #600 sandpaper.

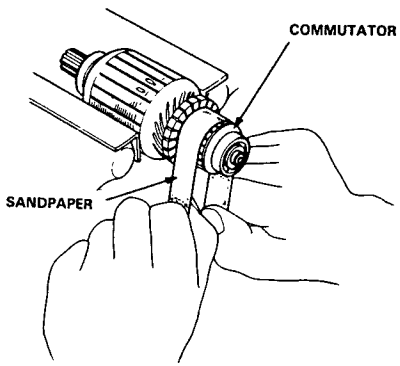

5. Check for mica depth. If necessary, undercut mica with a hacksaw blade to achieve proper depth.

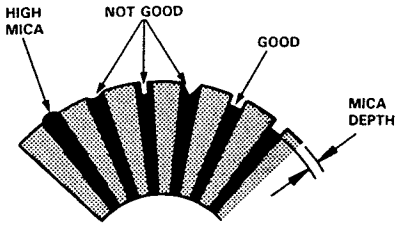

Commutator Mica Depth

	Standard (NEW)	Service Limit
Mitsubishi (2.0 KW)	0.5-0.8 mm (0.02-0.03 in)	0.02 mm (0.008 in)
Mitsuba (2.0 KW)	0.4-0.5 mm (0.016-0.02 in)	0.15 mm (0.006 in)
Mitsuba (1.6 KW)	0.4-0.5 mm (0.016-0.02 in)	0.15 mm (0.006 in)

6. Check for continuity between each segments of the commutator. If an open circuit exists between any segments, replace the armature.

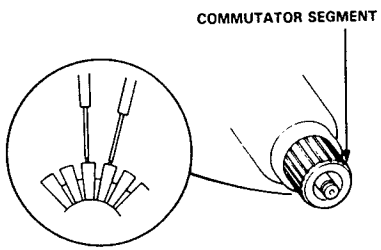

7. Place the armature on an armature tester. Hold a hacksaw blade on the armature core.

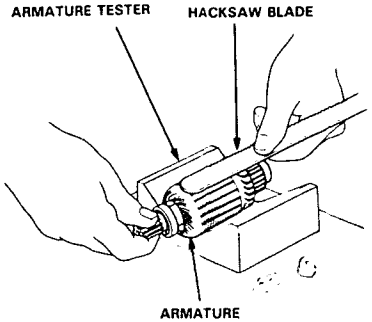

If the blade is attracted to the core or vibrates while the core is turned, the armature is shorted. Replace the armature.

8. Check with an ohmmeter that no continuity exists between the commutator and armature coil core, and between the commutator and armature shaft. If continuity exists, replace the armature.

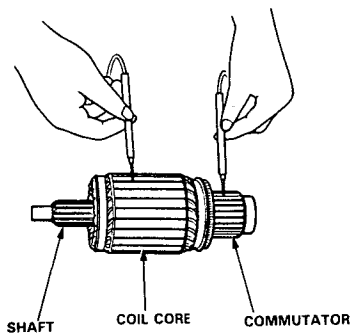

Starter Solenoid Test

1. Remove the starter solenoid from the gear housing.

Mitsuba type:

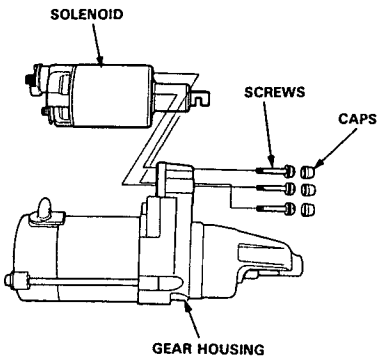

Mitsubishi type:

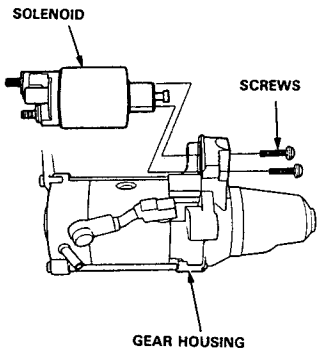

2. Check for continuity between the terminals in each solenoid plunger position according to the table.

Position \ Terminal	B	M	S	Ground
RELEASED		○	○	○
PUSHED	○	○	○	○

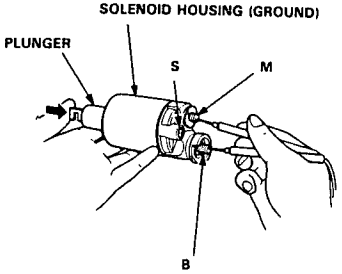

NOTE: The illustration shows Mitsuba type.

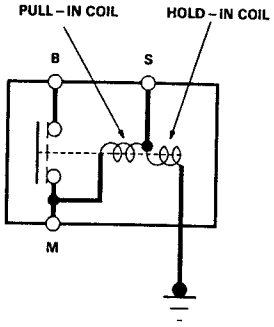

Starter Brush Holder Test

1. Check that there is no continuity between the ⊕ and ⊖ brush holders. If continuity exists, replace the brush holder assembly.

Mitsuba:

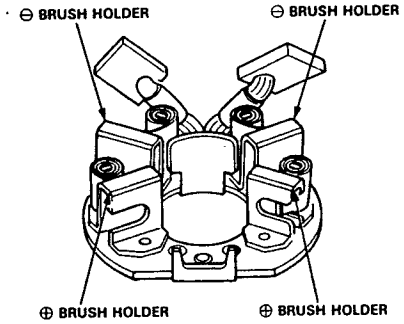

Mitsubishi:

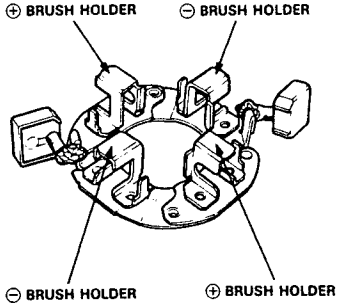

2. Insert the brush into the brush holder, and bring the brush into contact with the commutator, then attach a spring scale to the spring. Measure the spring tension at the moment the spring lifts off the brush.

	Spring Tension
Mitsubishi (2.0 KW)	29.7-36.3 N (2.97-3.63 Kg, 6.55-8.00 lbs)
Mitsuba (2.0 KW)	17-19 N (1.70-1.90 Kg, 3.75-4.19 lbs)
Mitsuba (1.6 KW)	16-18 N (1.60-1.80 Kg, 3.57-3.97 lbs)

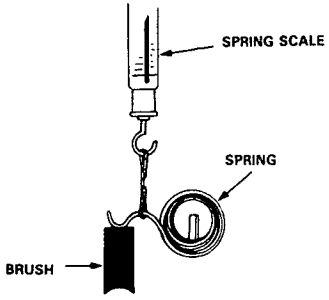

Starter Brush Inspection

Measure the brush length. If it is not within the service limit, replace the armature housing and brush holder assembly.

Brush Length

	Standard (New)	Service Limit
Mitsubishi (2.0 KW)	18.0 mm (0.71 in)	11.0 mm (0.43 in)
Mitsuba (2.0 KW)	16.8-17.2 mm (0.66-0.68 in)	11.0 mm (0.43 in)
Mitsuba (1.6 KW)	15.8-16.2 mm (0.62-0.64 in)	11.0 mm (0.43 in)

Mitsubishi:

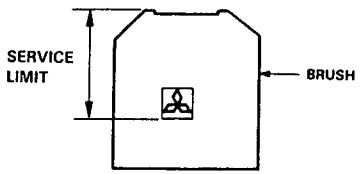

Mitsuba:

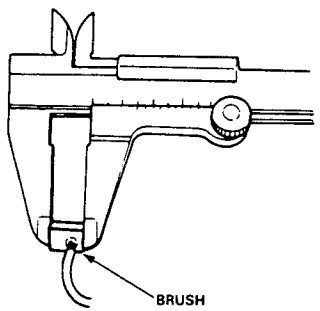

NOTE: To seat new brushes after installing them in their holders, slip a strip of #500 or #600 sandpaper, with the grit side up, over the commutator and smoothly rotate the armature. The contact surface of the brushes will be sanded to the same contour as the commutator.

Starter Field Winding Test (Mitsubishi)

1. Check for continuity between the brushes. If there's no continuity, replace the armature housing.
2. Check for continuity between each brush and the armature housing (ground). If continuity exists, replace the armature housing.

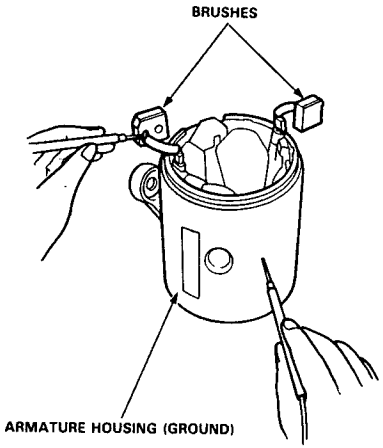

Overrunning Clutch Inspection

1. Slide the overrunning clutch along the shaft. Does it move freely? If not, replace it.
2. Rotate the overrunning clutch both ways. Does it lock in one direction and rotate smoothly in reverse? If it does not lock in either direction or it locks in both directions, replace it.

Mitsubishi (2.0 KW):

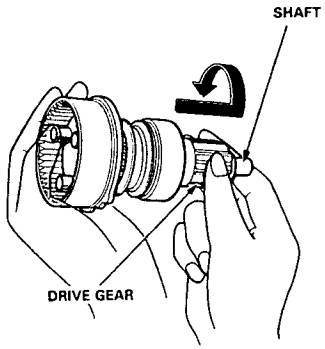

Mitsuba (2.0 KW):

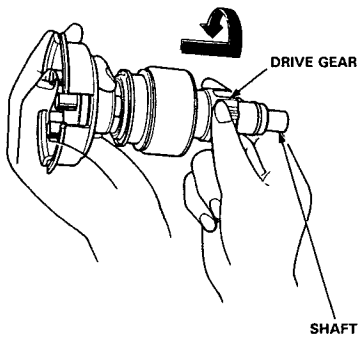

Mitsuba (1.6 KW):

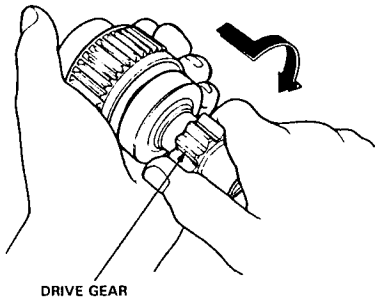

3. If the starter drive gear is worn or damaged, replace the overrunning clutch assembly; the gear is not available separately.
4. Check the condition of the flywheel or torque converter ring gear if the starter drive gear teeth are damaged.

Planetary Gear Inspection

1. Check the planetary gear for wear and damage.
2. If the planetary gear is worn or damaged, check the condition of the armature shaft gear and internal gear.

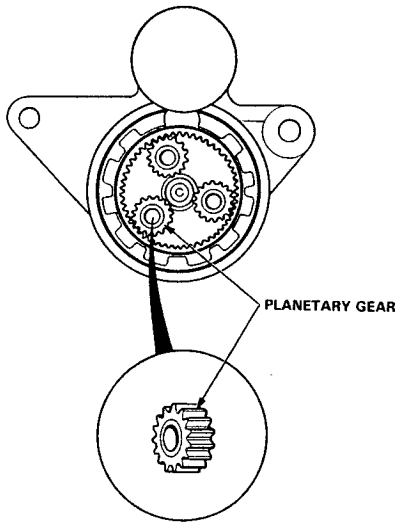

Overrunning Clutch Removal

1. Put the end of a pipe with an inner diameter of 13 mm (0.51 in) against the stop and strike the pipe to dismount the stop from the ring.

A: 13 mm (0.51 in)

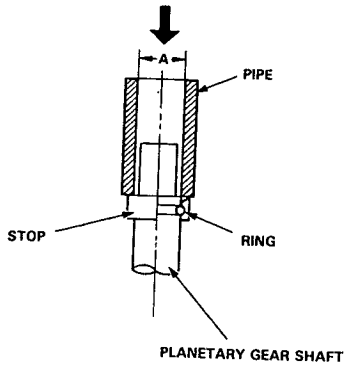

2. Remove the ring, then pull the stop and overrunning clutch off the shaft.

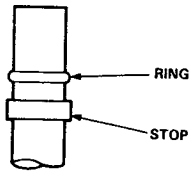

Starter Reassembly

Reassemble the starter in the reverse order of disassembly.

1. Pry back each brush spring with a screwdriver, then position the brush about halfway out of its holder, and release the spring to hold it there.

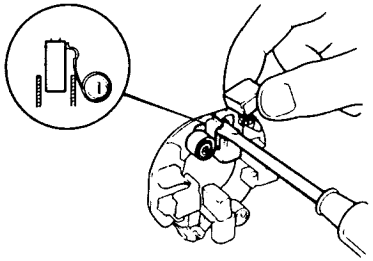

2. Install the armature in the housing. Next pry back each brush spring again and push the brush down until it seats against the commutator, then release the spring against the end of the brush.

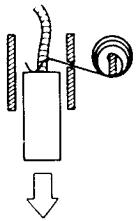

3. Install the end cover on the brush holder.

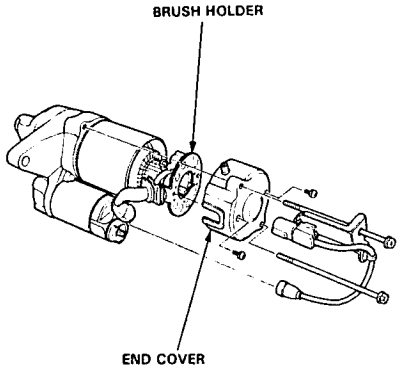

Performance Test

NOTE: Before starting the following checks, disconnect the wire from terminal M,and make a connection as described below using as heavy a wire as possible (preferably equivalent to the wire used for the car).

Pull-in Coil Test:

Connect the battery as shown. If the pinion protrudes, it is working properly.

NOTE: Do not leave the battery connected for more than 10 seconds.

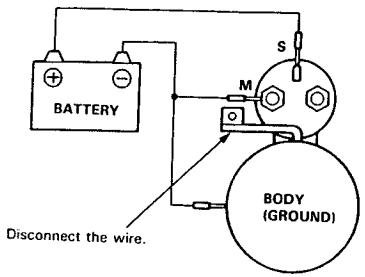

Hold-in Coil Test:

Disconnect the battery from the M terminal. If the pinion does not snap back, the hold-in coil is working properly.

NOTE: Do not leave the battery connected for more than 10 seconds.

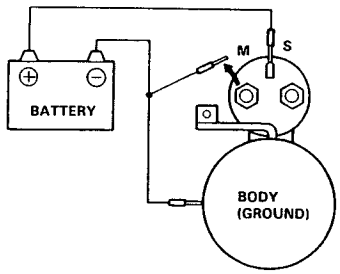

Retracting Test:

Disconnect the battery from the body. If the pinion retracts immediately, it is working properly.

NOTE: Do not leave the battery connected for more than 10 seconds.

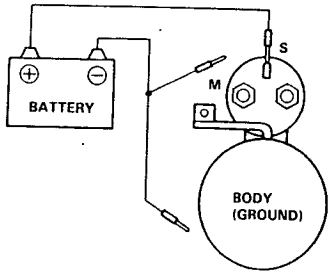

Pinion Gap Check:

1. Disconnect the wire from terminal M.
2. When the battery is connected between terminals S and M, the pinion protrudes and stops. Keep the pinion in this position and measure the gap between the pinion and the pinion stop.

   NOTE: Do not leave the battery connected for more than 10 seconds.

Specification:
Pinion Gap: 0.5–2 mm (0.02–0.08 in)

3. If the pinion gap is out of the specified range, adjust the gap by increasing or decreasing the number of washers between the solenoid and the gear housing. When the number of washers is increased, the gap becomes smaller.

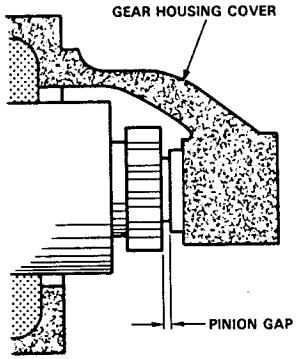

Starter No-load Test:

1. Clamp the starter firmly in a vise.
2. Connect the starter to the battery as shown in the diagram below and confirm that the motor starts and keeps rotating.
3. If the electric current and motor speed meet the specifications when the battery voltage is at 11 V, the starter is working properly.

Specifications:
Mitsubishi
(2.0 KW): 140 A or less (Electric current),
3,800 rpm or more (Motor speed)

Mitsuba
(2.0 KW): 90 A or less (Electric current),
2,200 rpm or more (Motor speed)

Mitsuba
(1.6 KW): 80 A or less (Electric current),
2,600 rpm or more (Motor speed)

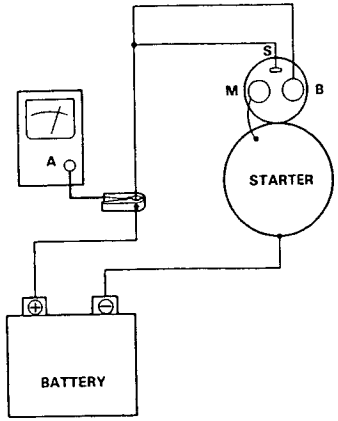

Ignition System

Component Location Index

IGNITION TIMING CONTROL SYSTEM

- Troubleshooting, section 11
- Inspection and setting page 23-100

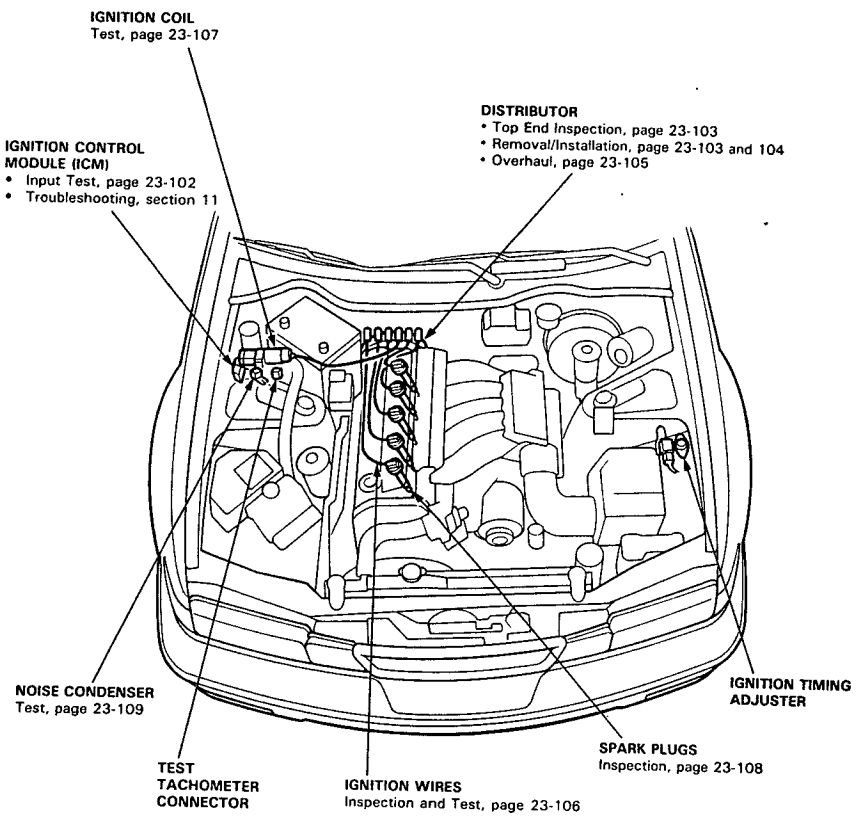

Circuit Diagram

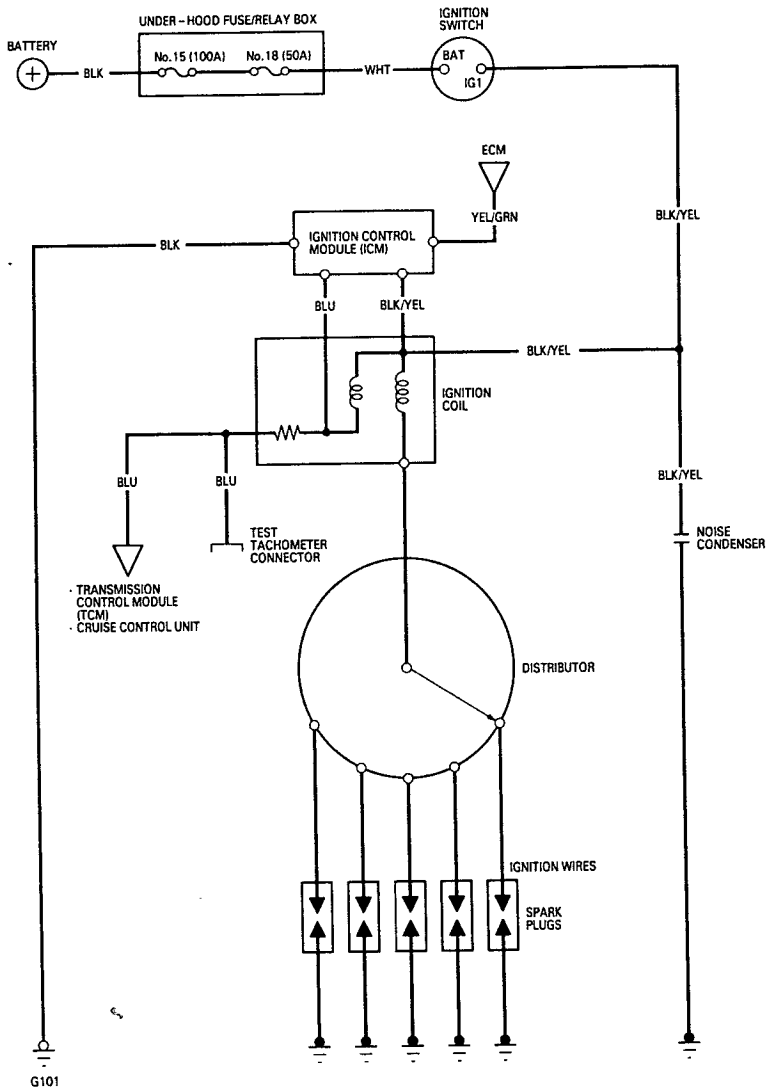

Ignition Timing Inspection and setting

CAUTION:
- **All SRS electrical wiring harnesses are covered with yellow outer insulation.**
- **Before disconnecting the SRS wire harness, install the short connector (s) on the airbag (s).**
- **Replace the entire affected SRS harness assembly if it has an open circuit or damaged wiring.**

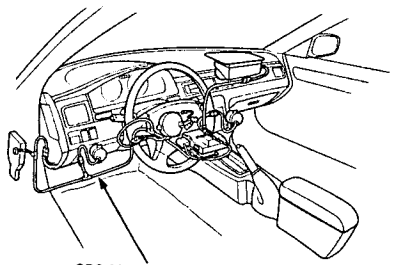

1. Start the engine and allow it to warm up (the radiator fan comes on).
2. Pull out the service check connector (BLU) located under the middle of the dash. Connect the WHT/GRN and BRN terminals with a jumper wire.

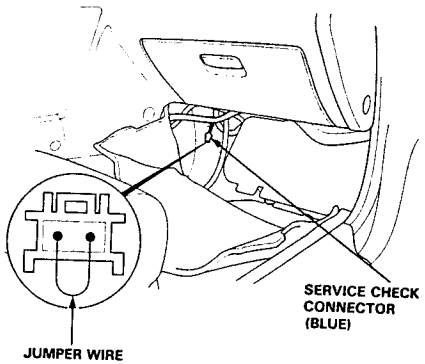

3. Check the idle speed (see page 23-101).

   NOTE: Adjust the idle speed, if necessary, by turning the idle adjusting screw (see section 11).

4. Connect a timing light to the No. 1 ignition wire; while the engine idles, point the light toward the pointer on the timing belt cover.

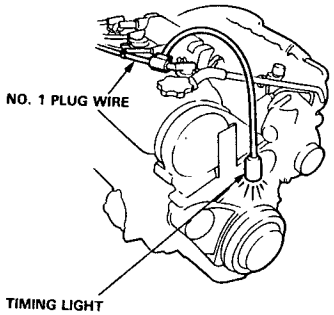

5. Inspect ignition timing at idle speed.

   Ignition Timing: 15° ± 2° BTDC (RED)

   - Manual Transmission (at 700 ± 50 rpm in neutral)
   - Automatic Transmission (at 700 ± 50 rpm in N or P)

   NOTE: All electrical systems should be turned off.

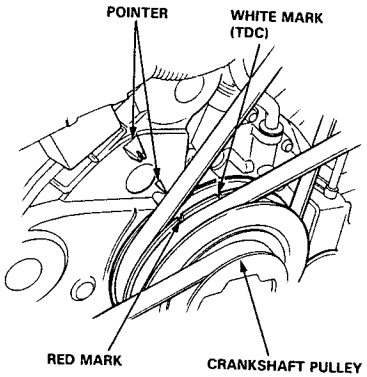

6. If it is necessary to adjust the ignition timing, remove the ignition timing adjuster.
   - Drill the two rivets off with a 5 mm (3/16 in) drill bit, then separate the cover from the adjuster.

   CAUTION: Do not damage the adjuster when removing the rivets.

7. Adjust the ignition timing by turning the adjusting screw on the ignition timing adjuster.

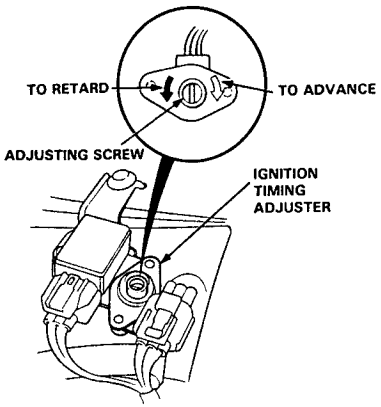

8. Remove the jumper wire from the service check connector.
9. After adjusting, reinstall the cover on the ignition timing adjuster with new rivets.

Idle Speed Inspection

1. Start the engine and allow it to warm up (the radiator fan comes on).
2. Connect a tachometer to the test tachometer connector.

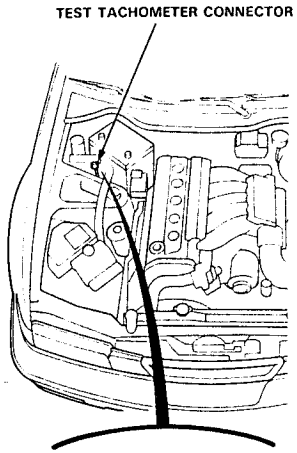

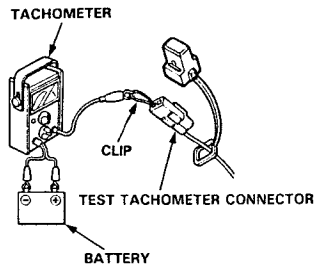

Idle speed:
M/T: 700 ± 50 rpm in neutral
A/T: 700 ± 50 rpm in N or P

NOTE: All electrical systems should be turned off.

3. Adjust the idle speed, if necessary (see section 11).

Ignition Control Module (ICM) Input Test

NOTE:
- See section 11 when the malfunction indicator lamp (MIL) blinks.
- Perform an input test on the ignition control module (ICM) after finishing the fundamental tests for the ignition system and fuel emission system.
- The tachometer should operate normally.

Disconnect the 4-P connector from the ICM. Make the following input tests at the connector terminals. If all tests prove OK, yet the system still fails to work, replace the ICM.

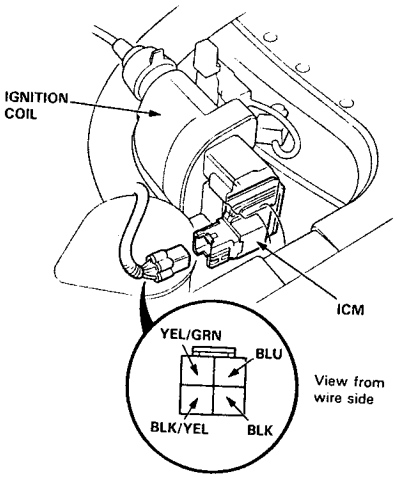

1. Check for continuity between the BLK wire and body ground.
   - If there is continuity, go to step 2.
   - If there is no continuity, check for:
     - An open in the BLK wire.
     - Disconnected terminals.
     - Poor ground (G101).
2. With the ignition switch ON, there should be battery voltage between the BLK/YEL wire and BLK wire.
   - If there is battery voltage, go to step 3.
   - If there is no voltage, check for:
     - An open in the BLK/YEL wire.
     - Disconnected terminals.
     - Ignition coil test (see page 23-107).
3. With the ignition switch ON, there should be battery voltage between the BLU wire and BLK wire.
   - If there is no voltage, Check for:
     - An open in the BLU wire between the ignition coil and ICM.
     - Ignition coil test (see page 23-107).

Distributor Top End Inspection

1. Check for rough or pitted rotor and cap terminals.
2. Scrape or file off the carbon deposits. Smooth the rotor terminal with an oil stone or #600 sandpaper if rough.
3. Check the distributor cap for cracks, wear, and damage. If necessary, clean or replace it.

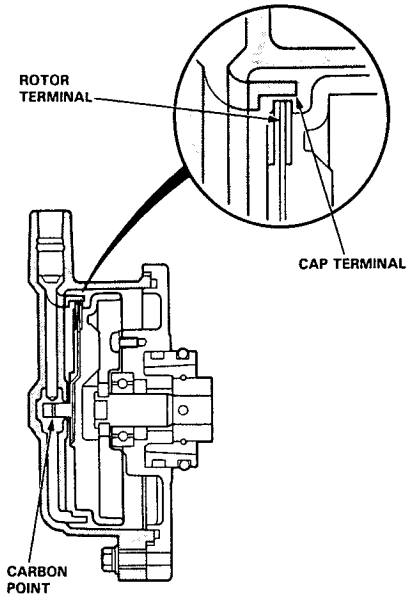

Distributor Removal

1. Disconnect the ignition wires from the distributor cap.

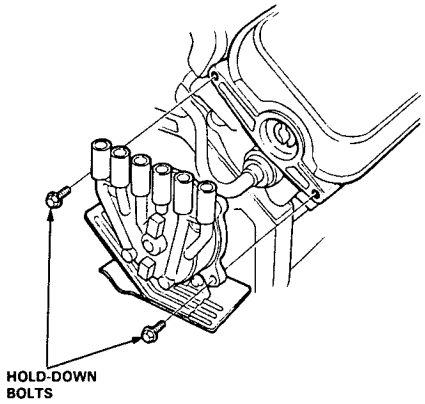

2. Remove the distributor hold-down bolts, then remove the distributor from the cylinder head.

Distributor Installation

1. Coat a new O-ring with engine oil then install it.
2. Slip the distributor into position.

   NOTE: The lugs on the end of the distributor and its mating grooves in the camshaft end are both offset to eliminate the possibility of installing the distributor 180° out of time.

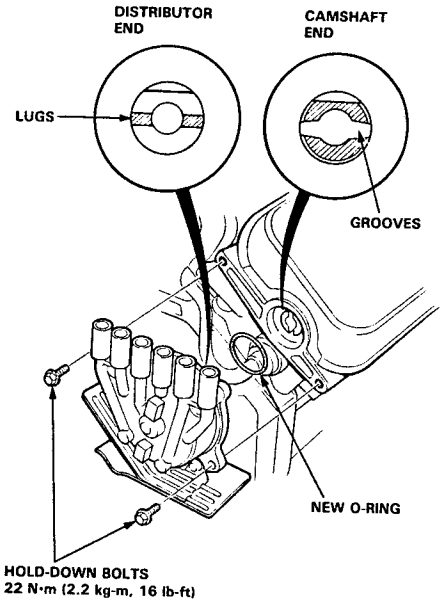

3. Install the hold-down bolts and tighten them temporarily.
4. Connect the ignition wires and ignition coil wire as shown.

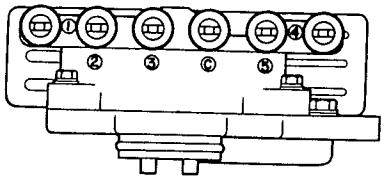

5. Set the timing with a timing light as shown on page 23-100.
6. After adjusting, tighten the hold-down bolts.

Distributor Overhaul

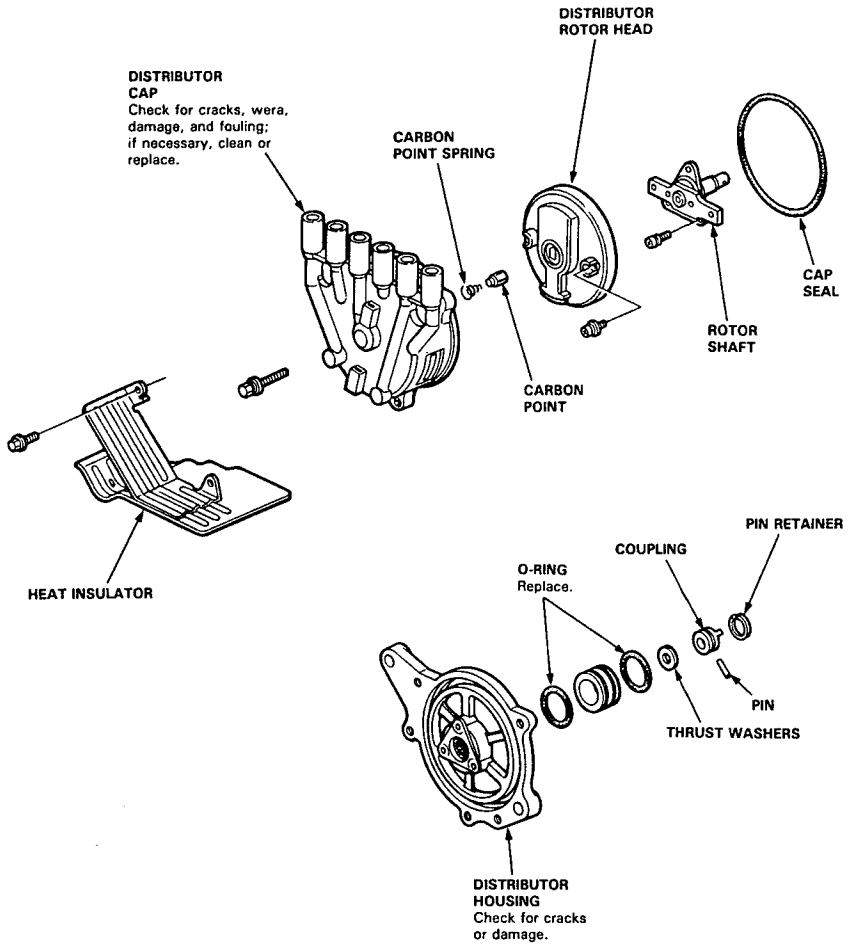

Distributor Reassembly

Reassemble the distributor shaft and housing in the reverse order of disassembly.

1. Install the rotor, then turn it so that it faces in the direction shown (toward the No. 1 cylinder).

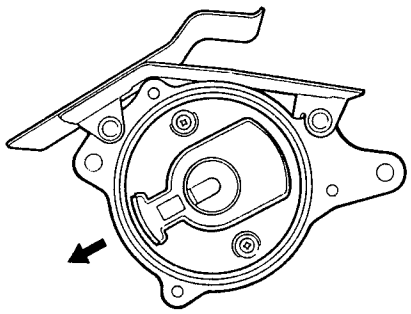

2. Slip the thrust washer and coupling onto the shaft.
3. Check that the rotor is still pointing toward the No. 1 cylinder, then align the index mark on the housing with the index mark on the coupling.

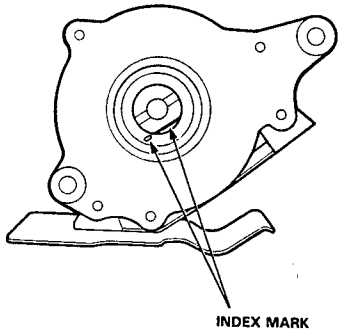

4. Drive in the pin and secure it with the pin retainer.

Ignition Wire Inspection and Test

CAUTION: Carefully remove the ignition wires by pulling on the rubber boots. Do not bend the wires; you might break them inside.

1. Check the condition of the ignition wire terminals. If any terminal is corroded, clean it, and if it is broken or distorted, replace the wire.

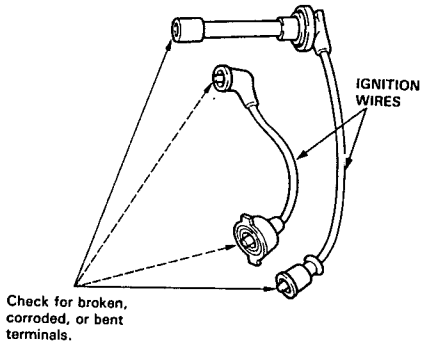

2. Connect ohmmeter probes and measure resistance.

   Ignition Wire Resistance:
   25 kΩ max. at 70 °F (20 °C)

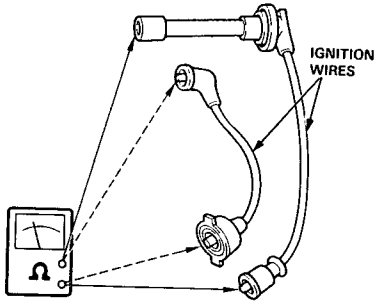

3. If resistance exceeds 25 kΩ, replace the ignition wire.

Ignition Coil Test

1. Turn the ignition switch OFF.
2. Disconnect the 4-P connector and ignition coil wire.

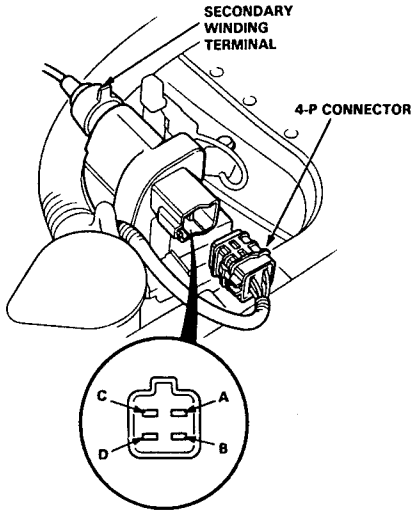

3. Using an ohmmeter, measure resistance between the terminals. Replace the coil if the resistance is not within specifications.

   NOTE: Resistance will vary with the coil temperature; specifications are at 68 °F (20 °C).

Primary Winding Resistance
(Between the A and D terminals):
0.3–0.5 ohms

Secondary Winding Resistance
(Between the A and secondary winding terminals):
10.8–16.2 kΩ

Resistance between the B and D terminals:
2.0–2.3 kΩ

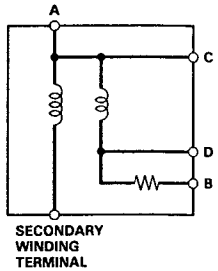

3. Check for continuity between the A and C terminals.
   - Replace the coil if there is no continuity.

Spark Plug Inspection

1. Inspect the electrodes and ceramic insulator for:

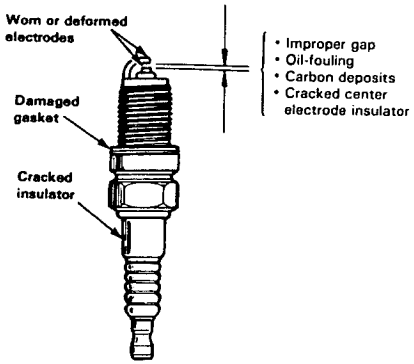

Burned or worn electrodes may be caused by:
- Advanced ignition timing
- Loose spark plug
- Plug heat range too hot
- Insufficient cooling

Fouled plug may be caused by:
- Retarded ignition timing
- Oil in combustion chamber
- Incorrect spark plug gap
- Plug heat range too cold
- Excessive idling/low speed running
- Clogged air cleaner element
- Deteriorated ignition coil or ignition wires

2. Adjust the gap with a suitable gapping tool.

   Electrode Gap: 1.1 mm (0.043 in)

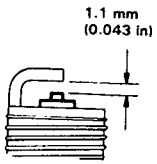

3. Replace the plug if the center electrode is rounded as shown below:

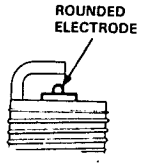

NOTE: Do not use spark plugs other than those listed below; these plugs are a new type (ISO standard).

These marks are sealed on the air cleaner cover.

Spark Plug:

BKR5E-N11 (NGK) K16PR-L11 (Nippondenso)	For all normal driving.
BKR6E-N11 (NGK) K20PR-L11 (Nippondenso)	For hot climates or continuous high speed driving.

4. Screw the plugs into the cylinder head finger-tight, then torque them to 18 Nm (1,8 kg-m, 13 lb-ft).

   NOTE: Apply a small quantity of anti-seize compound to the plug threads before installing.

Noise Condenser Capacity Test

1. Use a commercially available condenser tester. Connect the condenser tester probes and measure the condenser capacity.

   Condenser capacity: 0.47 ± 0.09 microfarads (μF)

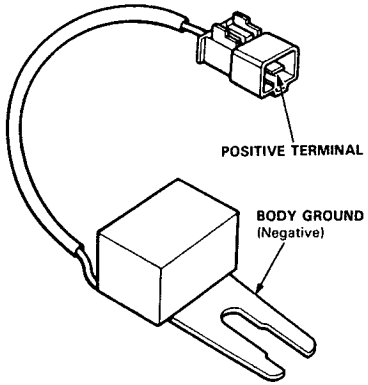

   NOTE: The noise condenser is intended to reduce ignition noise. However, condenser failure may cause the engine to stop running.

2. If not within the specifications, replace the noise condenser.

Component Location Index

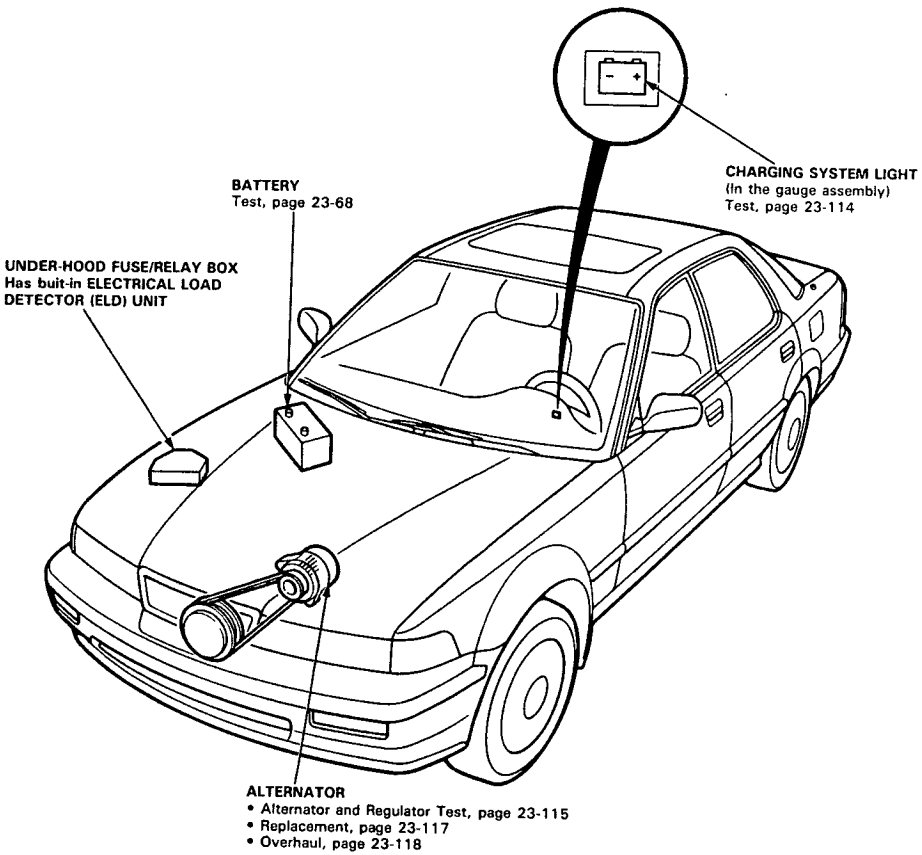

Description

To improve fuel economy, the alternator control system within the ECM changes the voltage generated at the alternator in accordance with driving conditions.

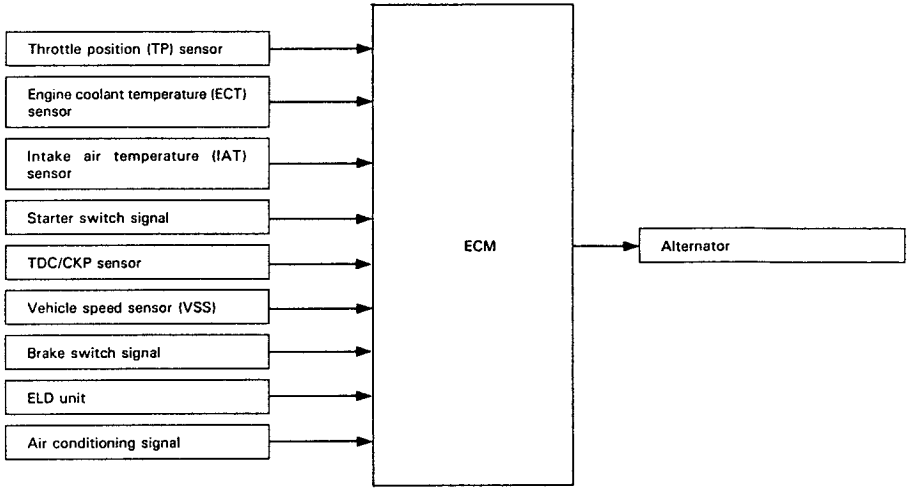

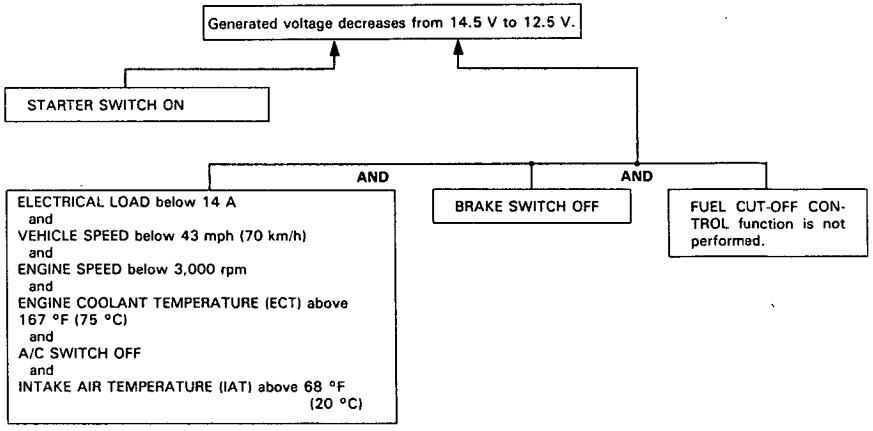

Charging System

Circuit Diagram

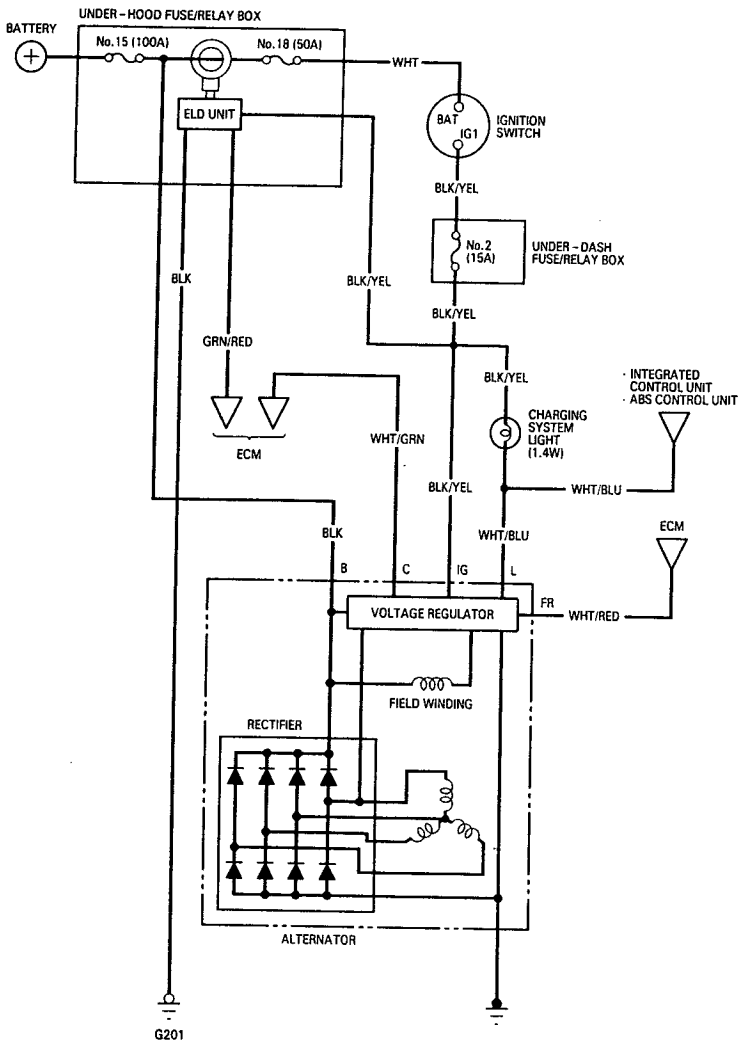

Troubleshooting

If the charging system light is on, or the battery is dead or low, perform the following tests in the order listed below:

1. Battery Test (see page 23-68)
2. Charging System Light Test
3. Alternator/Regulator Test

Charging System Light Test

Turn the ignition switch on.

Does the charging system light come on?
- NO → (To page 23-114)
- YES ↓

Start the engine.

Does the charging system light go off?
- YES → **Charging system light circuit is OK.**
- NO ↓

Turn the ignition switch off.

Disconnect the 4-P connector from the alternator.

Turn the ignition switch on.

Does the charging system light come on?
- YES → **Remove the 18-P connector from the ABS control unit and the 16-P connector from the integrated control unit. If the charging system light stays on, repair the short to ground in the WHT/BLU wire.**
- NO ↓

Perform alternator/regulator test (see page 23-115).

NOTE: After this test or related repairs, reconnect the control unit connectors, then reset the engine control module (ECM) to clear any codes.

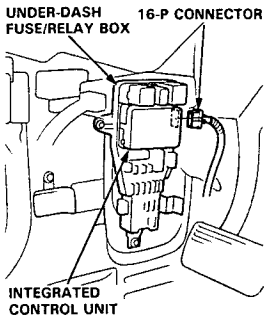

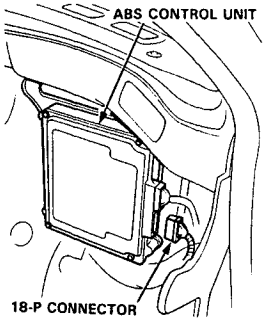

(cont'd)

Troubleshooting (cont'd)

(From page 23-113)

Turn the ignition switch off.

Check fuse No. 2 (15 A) in the under-dash fuse/relay box.

Is the fuse OK?
- NO → **Replace the fuse.**
- YES ↓

Disconnect the 4-P connector from the alternator.

Turn the ignition switch on.

Check for voltage at the IG terminal (BLK/YEL wire) of the 4-P connector.

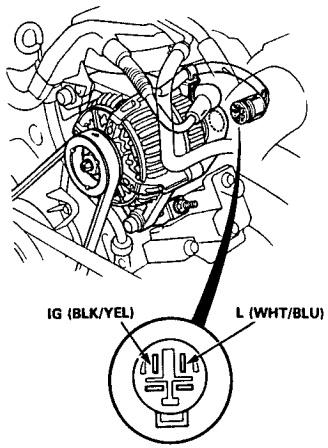

View from terminal side

Is there battery voltage?
- NO → **Repair open in the BLK/YEL wire.**
- YES ↓

Ground the WHT/BLU wire at the L terminal of the 4-P connector.

Does the charging system light come on?
- NO → **Check for a blown charging system light bulb. If the bulb is OK, repair open in the WHT/BLU wire.**
- YES ↓

Replace the voltage regulator

Alternator/Regulator Test

NOTE: Make sure the battery is sufficiently charged (see page 23-68).

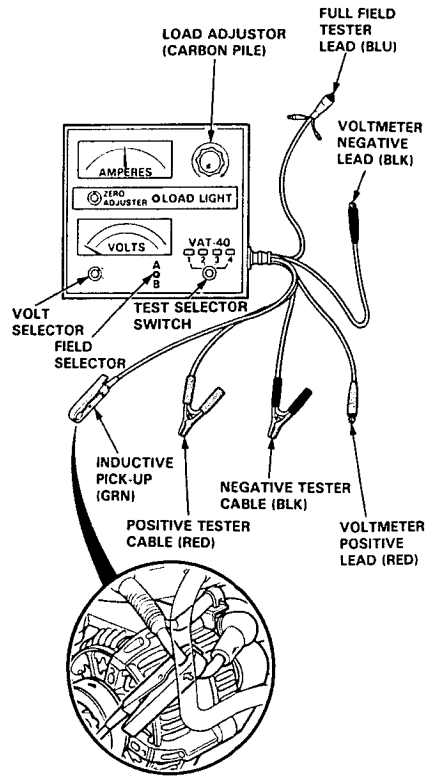

Connect the Sun VAT-40 (or equivalent test equipment) and turn the selector switch to position 1 (starting).

Start the engine and let it idle until it reaches normal operating temperature (the radiator fan comes on).

Raise the engine speed to 2000 rpm and hold it there.

Is the voltage over 15.1V?
- YES → **Replace the voltage regulator.**
- NO ↓

Release the accelerator pedal and let the engine idle.

Make sure all accessories are turned off. Turn the selector switch to position 2 (charging).

Remove the inductive pick-up and zero the ammeter.

Place the inductive pick-up over the B terminal wire of the alternator so that the arrow points away from the alternator.

Raise the engine speed to 2000 rpm and hold it there.

Is the voltage less than 13.9V?
- YES → **Test the battery (see page 23-68).**
- NO ↓

(To page 23-116)

(cont'd)

Troubleshooting (cont'd)

(From page 23-115)

Apply a load with the VAT-40 until the battery voltage drops to between 12–13.5 V.

Is the amperage 55 A or more?

YES → Charging system is OK.

NO

With the engine speed still at 2000 rpm, full-field the alternator.

NOTE: Attach a probe to the VAT-40 full field test lead and insert the probe into the full field access hole at the back of the alternator. Switch the field selector to the "A (Ground)" position momentarily and check amperage reading.

CAUTION: The voltage will rise quickly when the alternator is full-fielded. Do not allow the voltage to exceed 18 V or it may damage the electrical system.

Is the alternator output 55 A or more?

NO → Test and repair the alternator (see pages 23-118 to 23-120).

Turn the ignition switch off; then turn it on again.

YES

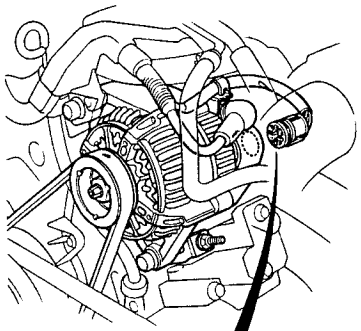

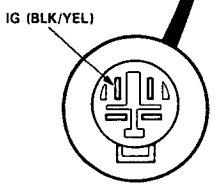

View from terminal side

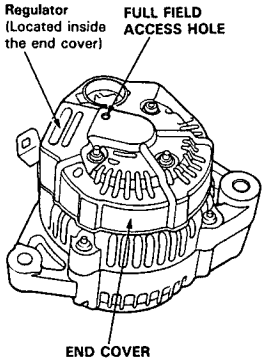

Disconnect the 4-P connector from the alternator.

Check for voltage at the IG terminal (BLK/YEL) of the 4-P connector.

Is there battery voltage ?

→ Repair open in the BLK/YEL wire.

Replace the voltage regulator.

Alternator Replacement

NOTE: The radio may have a coded theft protection circuit. Be sure to get the customer's code number before
- Disconnecting the battery.
- Removing the No.39 (10 A) fuse in the under-hood fuse/relay box.
- Removing the radio.

After service, reconnect power to the radio and turn it on. When the word "CODE" is displayed, enter the customer's 5-digit code to restore radio operation.

1. Disconnect both the negative cable and positive cable from the battery.

2. Disconnect the 4-P connector, then remove the terminal nut and the BLK wire from the B terminal.

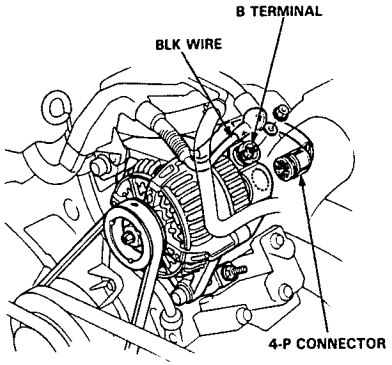

3. Loosen the adjustment lock bolt and adjusting nut, then remove the belt from the pulley.

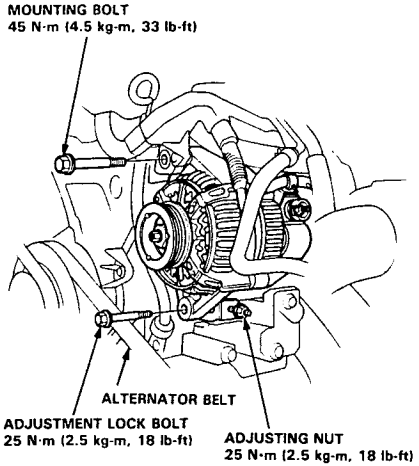

4. Remove the mounting bolt and the adjustment lock bolt. Then lift out the alternator.

5. Install the alternator in the reverse order of removal, then adjust belt tension (see pages 23-121, and 122).

Alternator Overhaul

NOTE: Only if the front bearing needs replacement, is it necessary to separate the pulley, drive end housing, and rotor.

To loosen the pulley locknut, use 10 mm and 22 mm wrenches. If necessary, use an impact wrench.

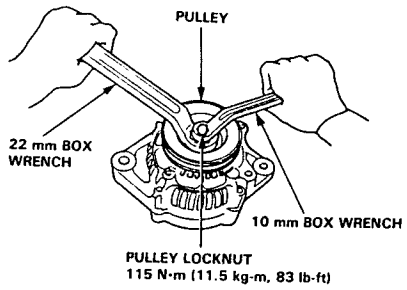

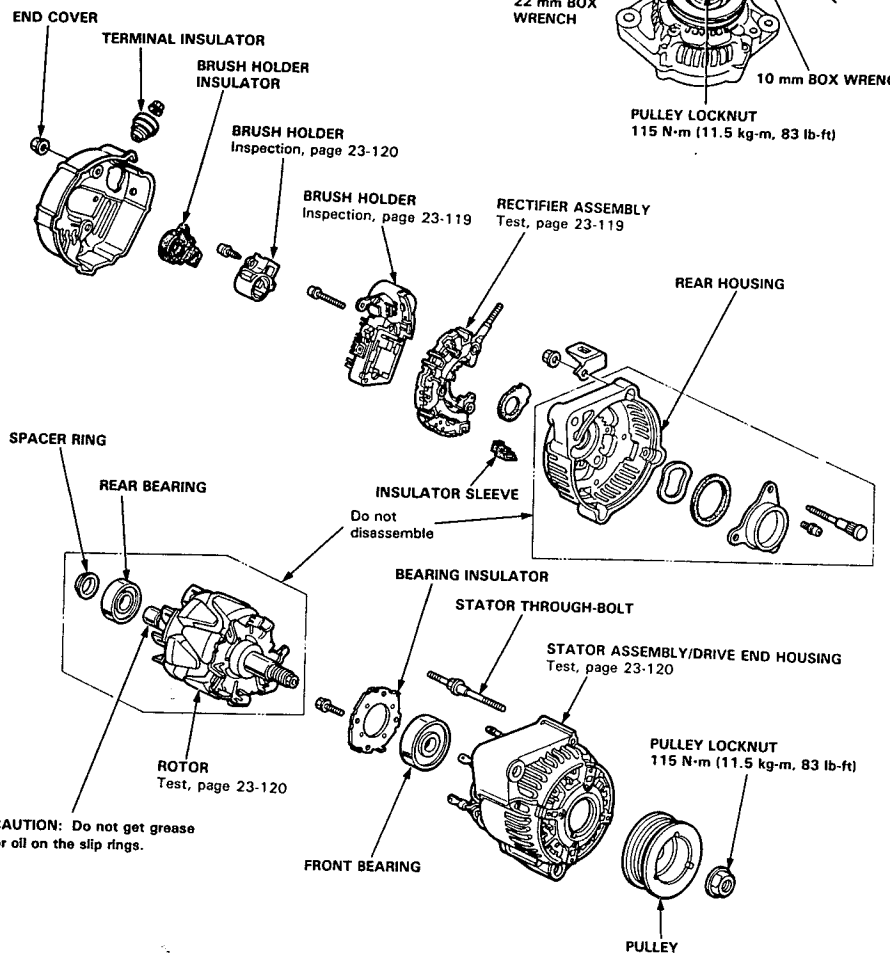

Rectifier Test

NOTE:
- The diodes are designed to allow current to pass in one direction while blocking it in the opposite direction. Each diode must be tested for continuity in both directions. Since the alternator rectifier is made up of eight diodes (four pairs), there are a total of 16 checks.
- Use an ohmmeter capable of checking diodes.

1. Check for continuity in each direction between the B and P terminals, and between the E (ground) and P terminals of each diode pair. All diodes should have continuity in only one direction.

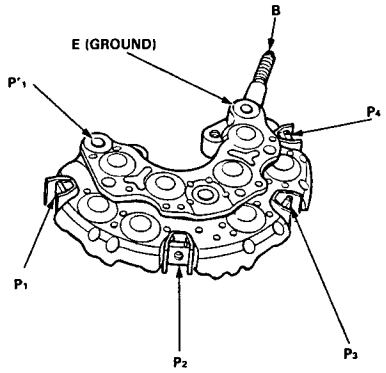

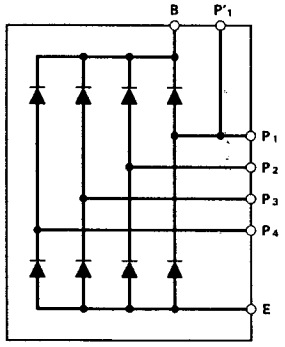

2. If any of the eight diodes tests bad, replace the rectifier assembly (diodes are not available separately).

Alternator Brush Inspection

1. Remove the end cover, then take out the brush holder by removing its two screws.

2. Measure the length of the brushes with a vernier caliper.

   Alternator Brush Length:
   Standard: 10.5 mm (0.41 in)
   Service Limit: 1.5 mm (0.06 in)

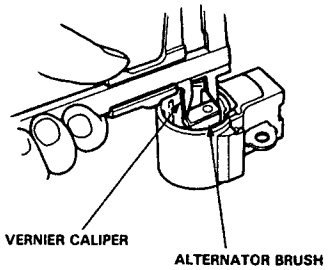

3. If the brushes are less than the service limit, replace the brush holder assembly.

Rotor Slip Ring Test

1. Check that there is continuity between the slip rings.
2. Check that there is no continuity between the slip rings and the rotor or rotor shaft.

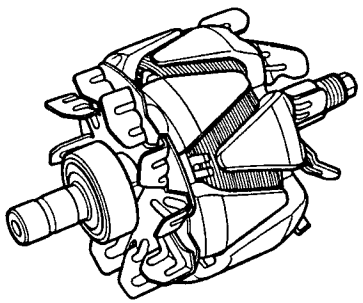

3. If the rotor fails either continuity check, replace it.

Stator Test

1. Check that there is continuity between each pair of leads.
2. Check that there is no continuity between each lead and the coil core.

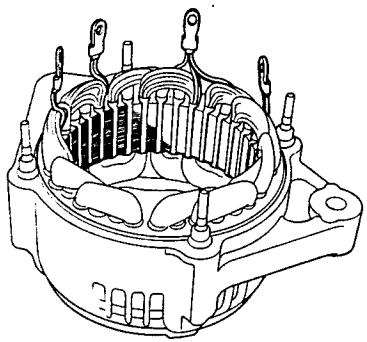

3. If the coil fails either continuity check, replace the stator.

Alternator Belt Adjustment

Deflection method:
Apply a force of 100 N (10 kg, 22 lbs) and measure the deflection between the alternator and crankshaft pulley.

Deflection: 7.5–9.5 mm (0.30–0.37 in)

NOTE:
- On a brand new belt (one that has been run for less than five minutes), the deflection should be 5–7 mm (0.20–0.28 in) when first measured.
- If there are cracks or any damage evident in the belt, replace it with a new one.

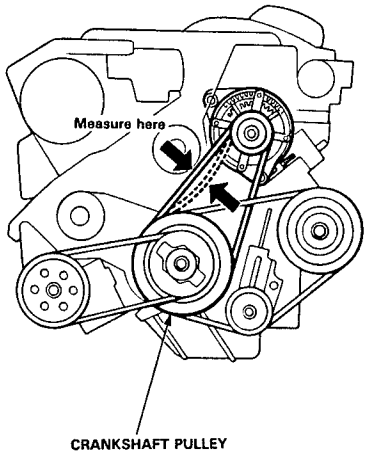

Tension gauge method:
Attach the belt tension gauge to the belt and measure the tension. Follow the gauge manufacturer's instructions.

Tension: 350–500 N (35–50 kg, 77–110 lbs)

NOTE:
- On a brand-new belt (one that has been run for less than five minutes), the tension should be 700–900 N (70–90 kg, 154–198 lbs) when first measured.
- If there are cracks or any damage evident in the belt, replace it with a new one.

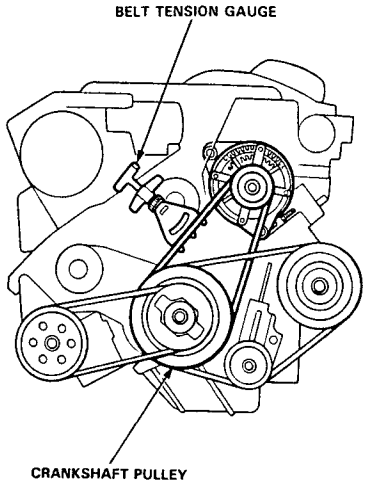

(cont'd)

Alternator Belt Inspection (cont'd)

If adjustment is necessary:

1. Loosen the mounting bolt and the adjusting lock bolt.
2. Move the alternator by turning the adjusting nut to obtain the proper belt tension, then retighten the bolts.

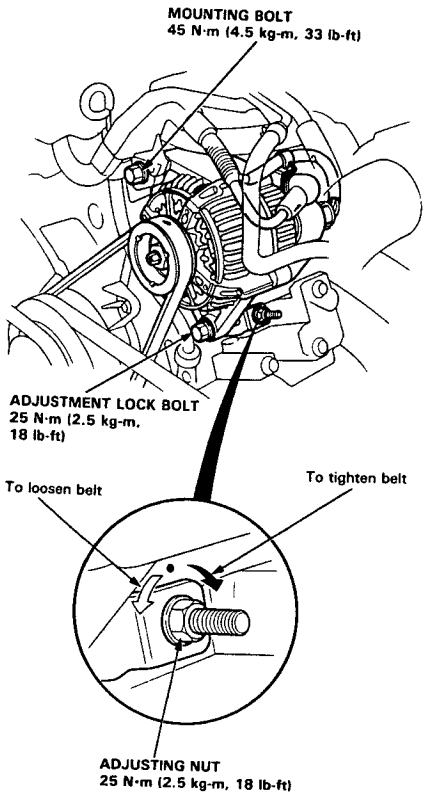

3. Recheck the deflection or tension of the belt.

Component Location Index

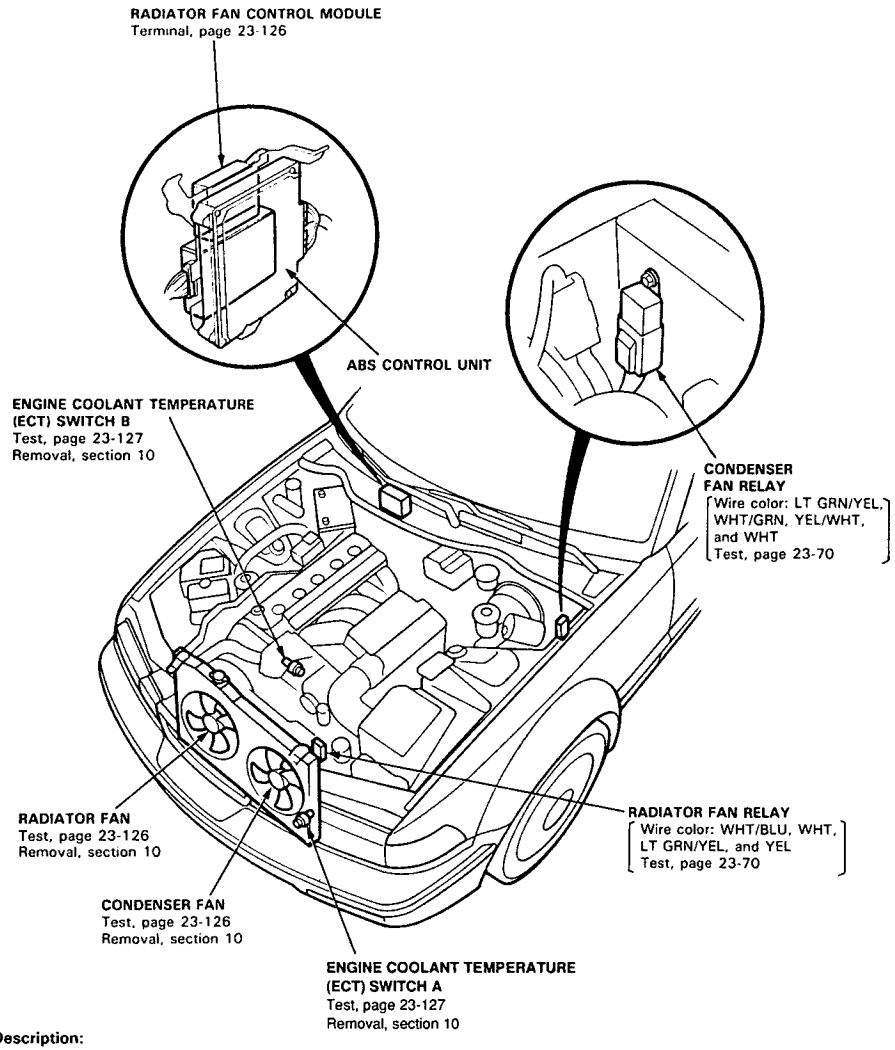

Description:

Radiator Fan Control System

When the engine coolant temperature (ECT) is above approximately 223°F (106°C) after the engine has stopped, the radiator fan will run for about 15 minutes.

The engine coolant temperature (ECT) switch B is located behind the water outlet cover, and the radiator fan control module is located under the right side of the dash.

Radiator and Condenser Fan Controls

Circuit Diagram

NOTE: Different wires with the same color have been given a number suffix to distinguish then (for example, WHT[1] and WHT[2] are not the same).

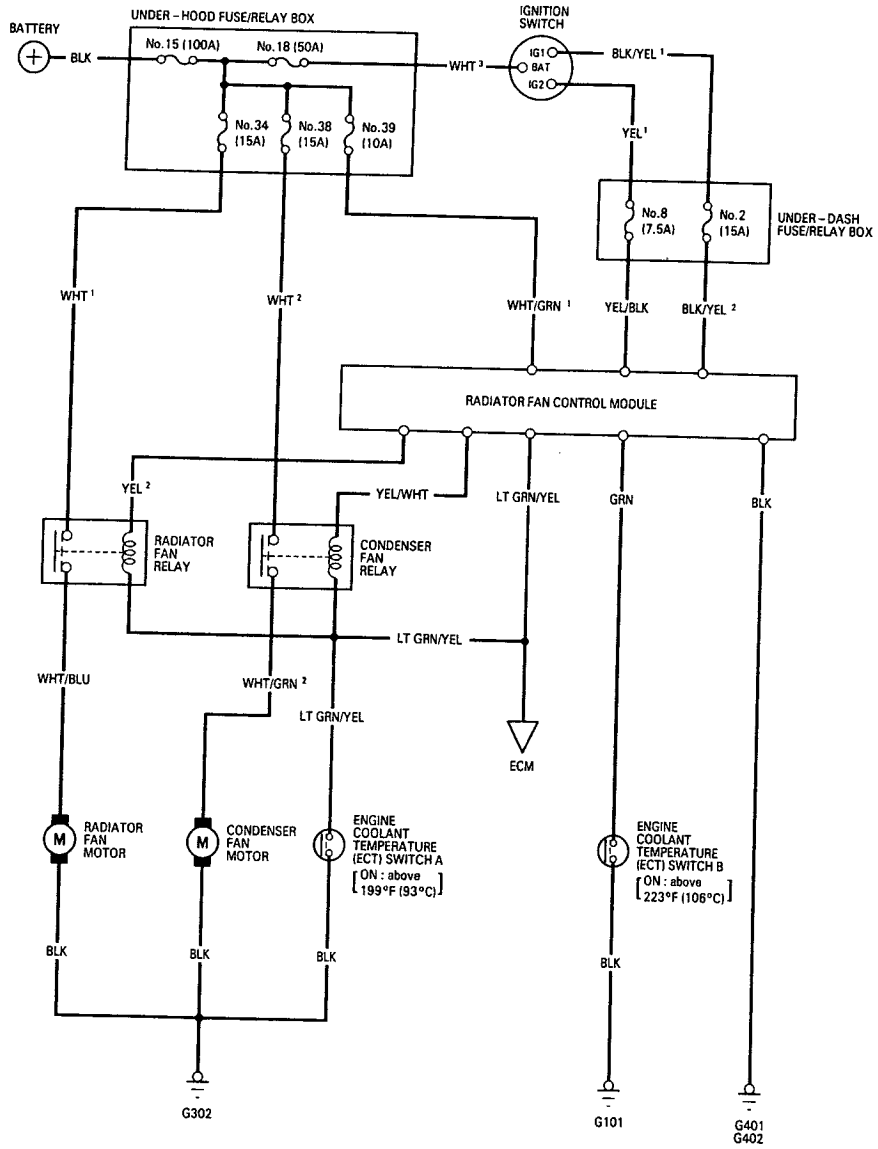

Troubleshooting

NOTE: The numbers in the table show the troubleshooting sequence.

Symptom \ Item to be inspected		Blown No. 34 (15 A) or No. 38 (15 A) fuse (In the under-hood fuse/relay box)	Blown No. 39 (10 A) fuse (In the under-hood fuse/relay box)	Blown No. 2 (15 A) fuse (In the under-hood fuse/relay box)	Blown No. 8 (7.5 A) fuse (In the under-hood fuse/relay box)	Radiator fan or condenser fan relay	Radiator fan or condenser fan motor	Engine coolant temperature (ECT) switch A	Engine coolant temperature (ECT) switch B	Faulty radiator fan control module	A/C system	Poor ground	Open circuit, loose or disconnected terminals
Only one fan operates (with engine and A/C ON).		1				2	3					G302	WHT[1], WHT[2], WHT/BLU, WHT/GRN, YEL[2], YEL/WHT or LT GRN/YEL
Fans do not rotate.	Under all conditions.				1			2	3			G302 G401 G402	YEL/BLK, LT GRN/YEL or YEL[1]
	A/C ON										1		
Radiator fan control module fails to function properly.			1	2					3	4		G101 G401 G402	GRN, YEL[2], WHT/GRN[2] or BLK/YEL[2]

Radiator and Condenser Fan Controls

Radiator Fan Control Module Terminals

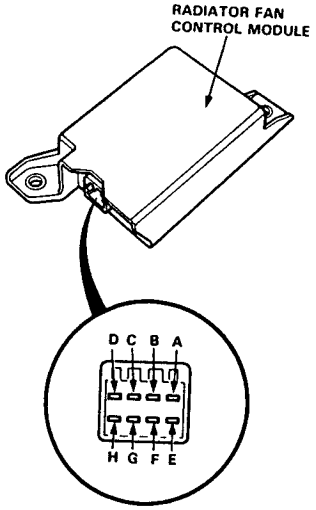

NOTE: See A/C section 22 for input test.

Terminal	Wire	Connects to
A	BLK	Ground (G401, G402)
B	YEL/WHT	Condenser fan relay (coil ⊕)
C	YEL/BLK	Power supply (For radiator fan and condenser fan relays by way of radiator fan control module with ignition switch ON)
D	YEL	Radiator fan relay (coil ⊕)
E	LT GRN/YEL	Radiator fan and condenser fan relays (coil ⊖)
F	BLK/YEL	IG1 (Radiator fan control module reset signal)
G	WHT/GRN	Power supply (For radiator fan control module with ignition switch OFF)
H	GRN	Engine coolant temperature (ECT) switch B

Fan Motor Test

1. Disconnect the 2-P connector from each fan motor.
2. Test the motor operation by connecting battery power to the A terminal, and ground to the B terminal.
3. If the fan motor fails to run or does not run smoothly, replace it.

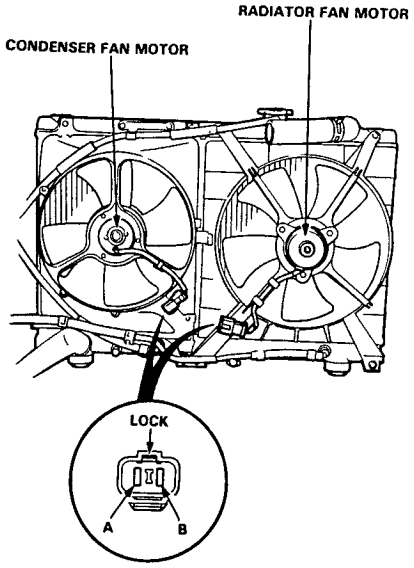

View from terminal side

Engine Coolant Temperature (ECT) Switch Test

NOTE: Bleed air from the cooling system after installing the engine coolant temperature (ECT) switch (see section 10).

1. Remove ECT switch B from the thermostat housing, or ECT switch A from radiator lower tank.
2. Suspend the ECT switch in a container of coolant as shown.

   NOTE: The illustration shows ECT switch A.

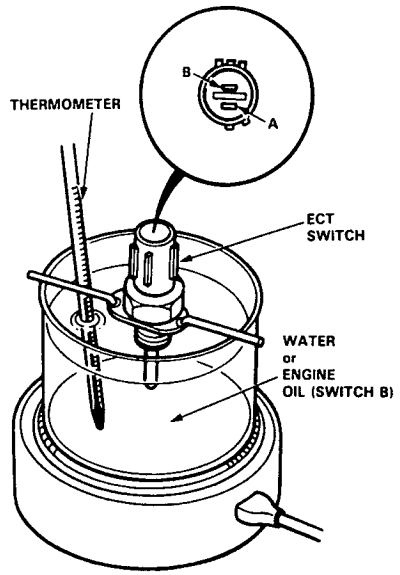

3. Heat the coolant and check coolant temperature with a thermometer.
4. Measure the resistance between the A and B terminals according to the table.

Temperature \ Terminal		A	B
Switch A	Above 90–96°C (194–205°F)	○	○
	Below 86–91°C (187–196°F)		
Switch B	Above 103–109°C (217–228°F)	○	○
	Below 97–102°C (207–216°F)		

NOTE: After completing the inspection, remove all traces of engine oil from ECT switch B.

Gauge Assembly

Gauge/Indicator/Terminal Location Index

CAUTION:
- All SRS electrical wiring harnesses are covered with yellow outer insulation.
- Before disconnecting the SRS wire harness, install the short connector (s) on the airbag (s).
- Replace the entire affected SRS harness assembly if it has an open circuit or damaged wiring.

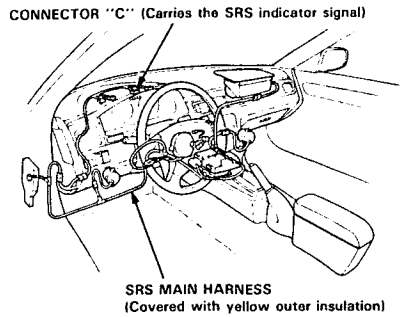

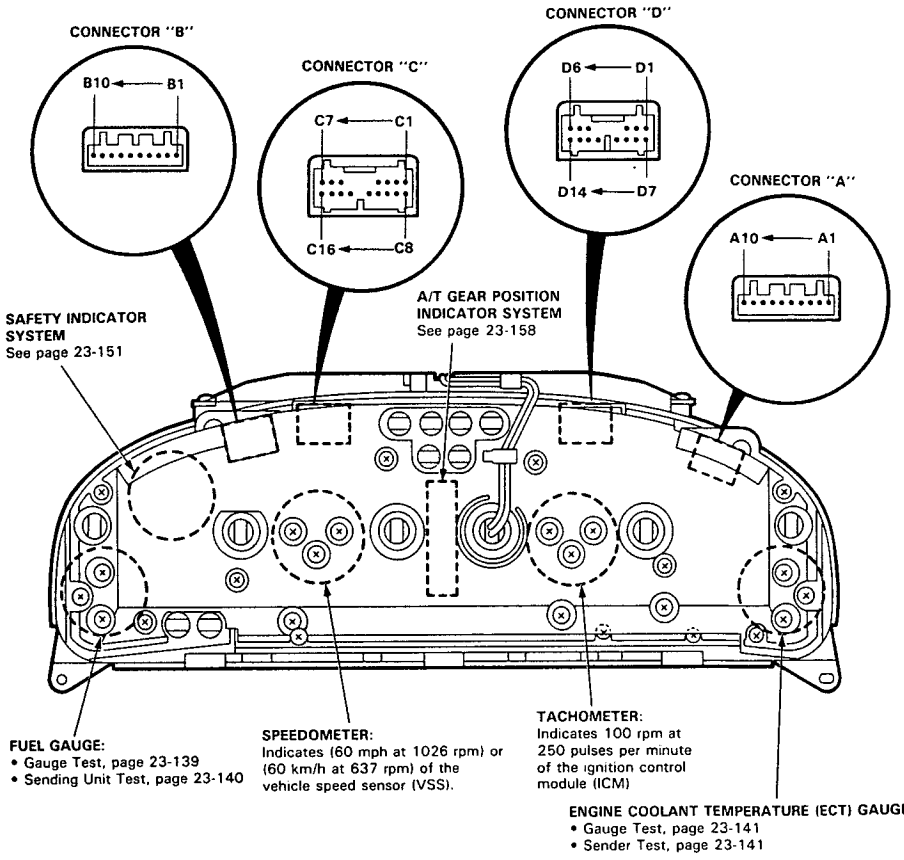

Gauge Assembly

Circuit Diagram

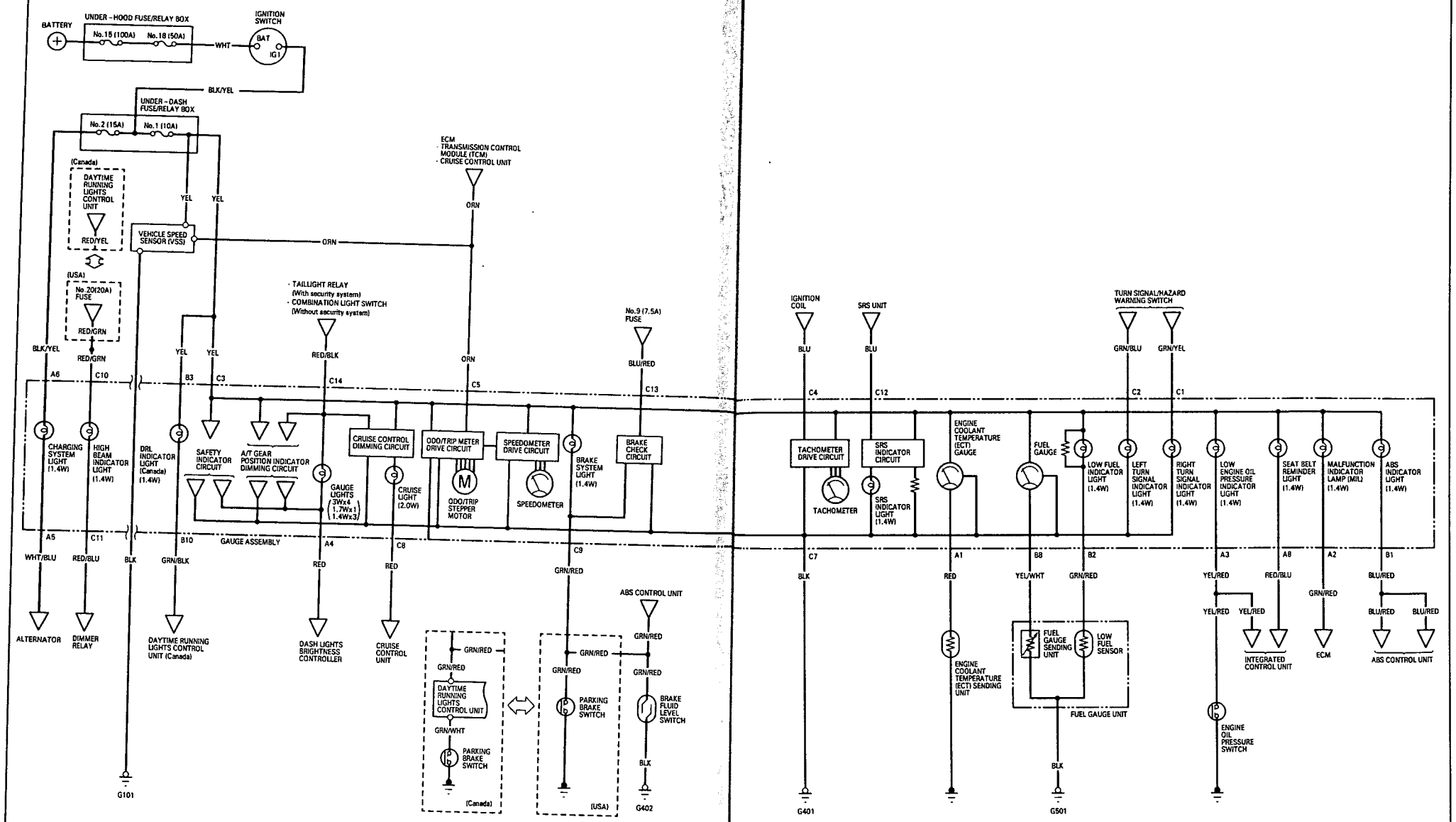

Removal

CAUTION:
- All SRS electrical wiring harnesses are covered with yellow outer insulation.
- Before disconnecting the SRS wire harness, install the short connector (s) on the airbag (s).
- Replace the entire affected SRS harness assembly if it has an open circuit or damaged wiring.

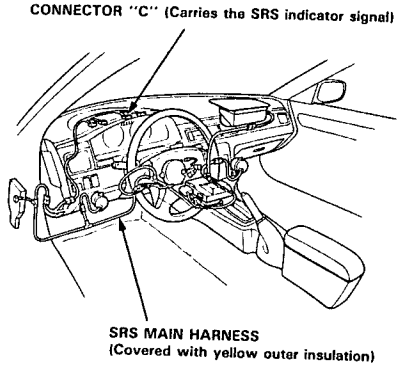

1. Remove the dashboard lower cover.

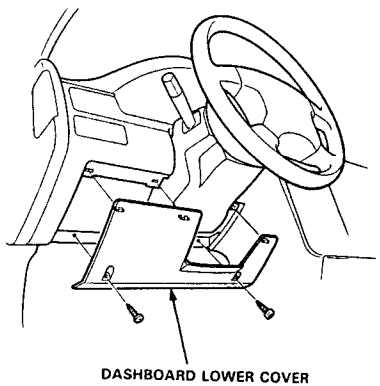

2. Remove the upper and lower column covers.

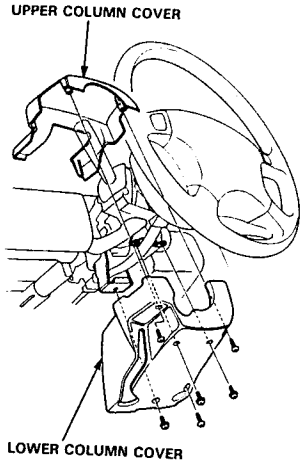

3. Carefully pry the switches out of the instrument panel.

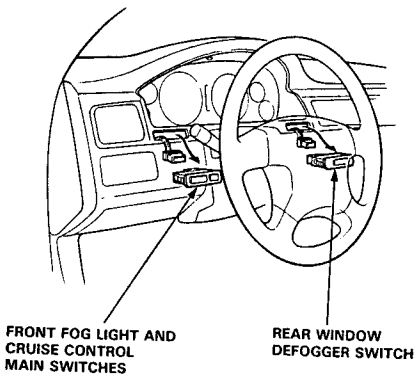

4. Remove the four screws, then remove the instrument panel from the dashboard.

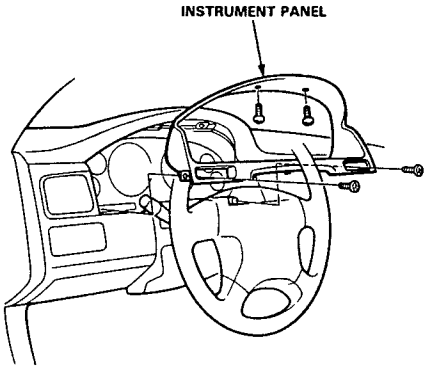

5. Place a protective cloth over the combination light switch to prevent scratching the gauge assembly. Remove the four screws from the gauge assembly, and pull the gauge assembly out.

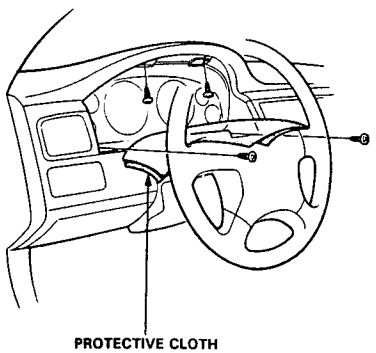

6. Disconnect the connectors from the gauge assembly.

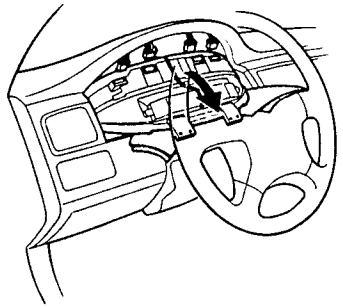

7. Take out the gauge assembly as shown.

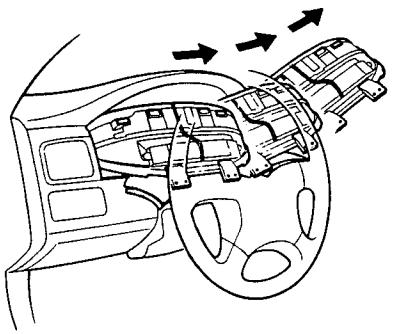

Gauge Assembly

Disassembly

NOTE:
- Handle the terminals and printed circuit boards carefully to avoid damaging them.
- If replacement is required, replace the speedometer and tachometer as a unit.

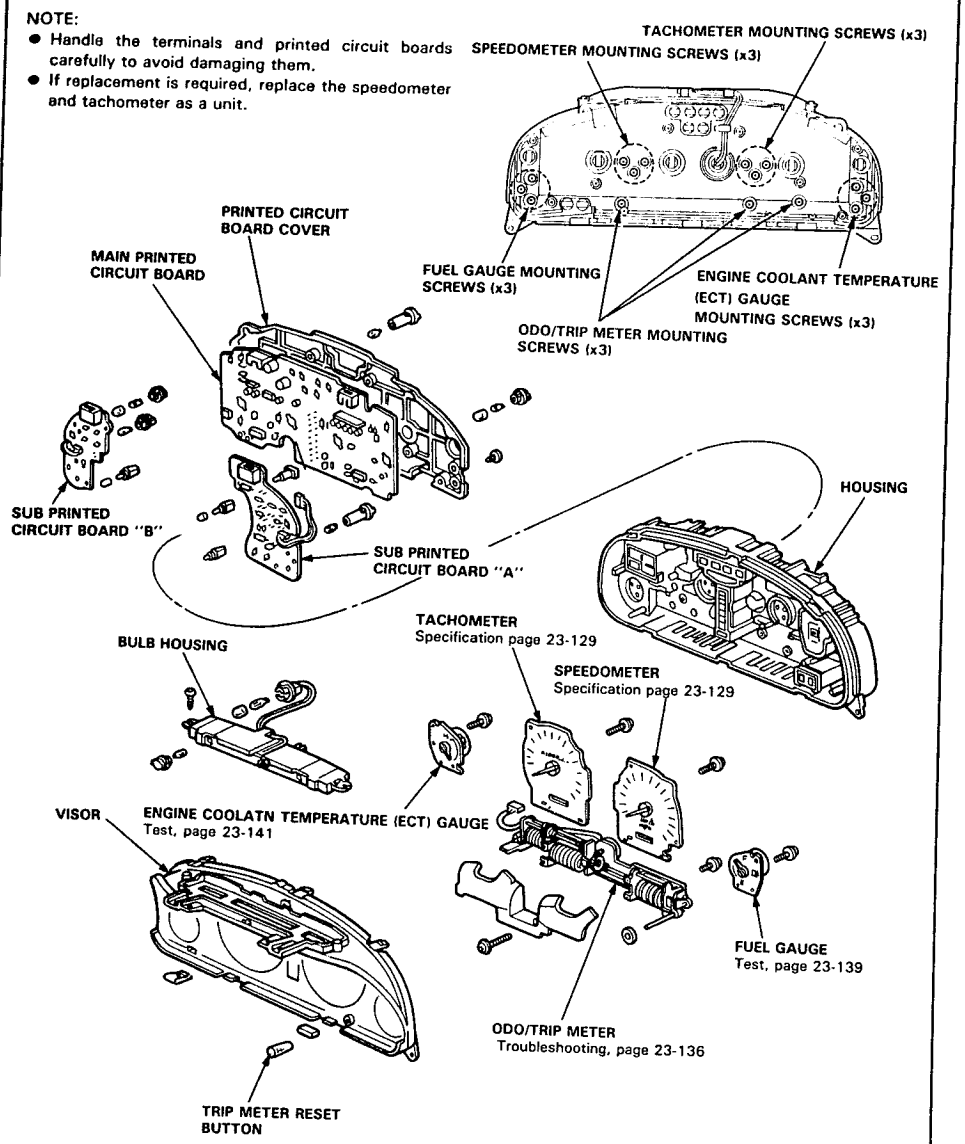

Bulb Locations

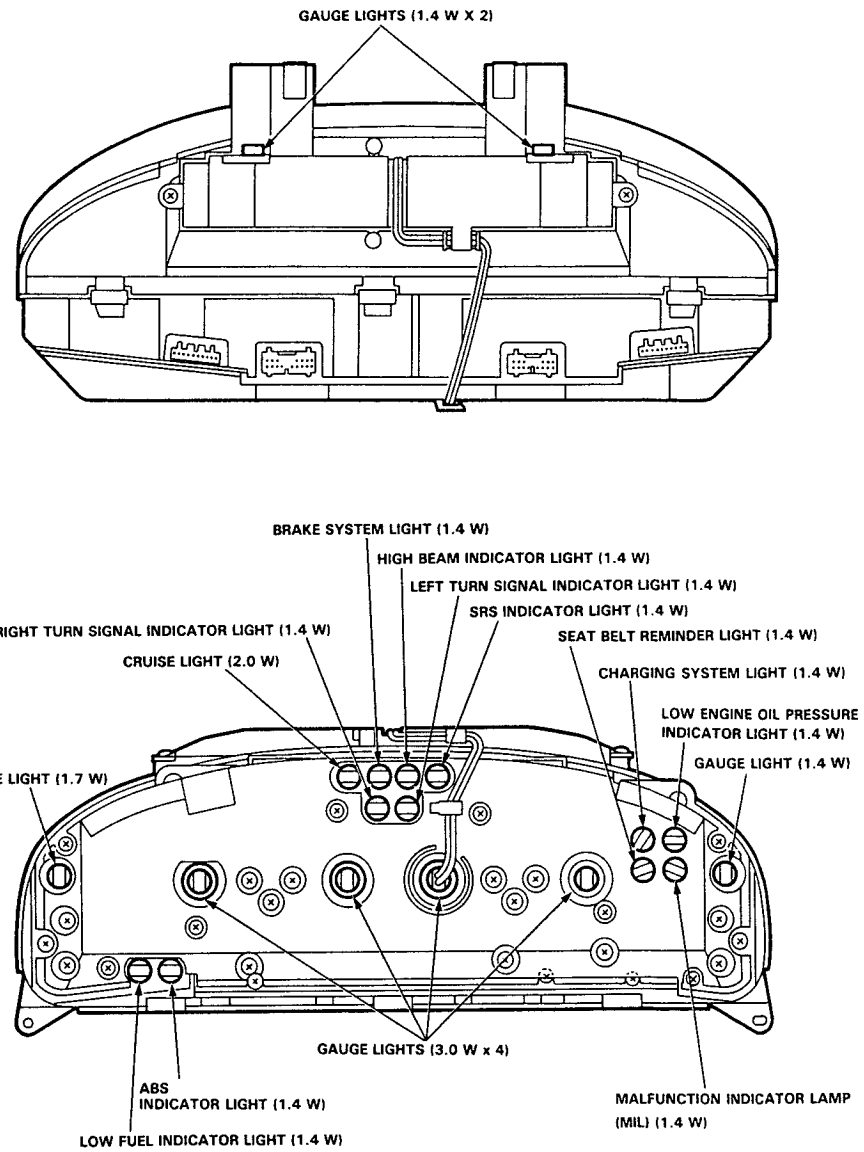

Troubleshooting

NOTE: The numbers in the table show the troubleshooting sequence.

Symptom \ Item to be inspected	Blown No. 1 (10 A) fuse (In the under-dash fuse/relay box)	Speedometer	Odo/Trip meter	Printed circuit board	Vehicle speed sensor (VSS) input test	Odometer connector at printed circuit board	VSS test flowchart
Odometer and trip meter work, but speedometer does not.		1		2			
Speedometer works, but odometer and trip meter do not.			1	2		3	
Speedometer, odometer, and trip meter do not work.	1				2		3

NOTE: VSS ground is via ECM (G101).

VSS Input Test (At harness side of 3-P connector)

No.	Wire	Test Condition	Test: Desired result	Possible cause if result is not obtained
1	BLK	Under all conditions	Check for continuity to ground: There should be continuity.	• An open in the wire. • Poor ground (G101).
2	YEL	Ignition switch ON	Check for voltage to ground: There should be battery voltage.	• Blown No. 1 (10 A) fuse. • Short to ground.
3	ORN	Ignition switch ON	Check for voltage to ground: There should be about 5 V.	• Short to ground. • An open in the wire.

NOTE: A short to ground in the ORN wire can be caused by a short in any component connected to it.

VSS Test

Speedometer does not work.

- Inspect No. 1 (10 A) fuse in the under-dash fuse/relay box before testing.
- Disconnect the 3-P connector at the VSS.
- Turn the ignition switch ON.
- Measure voltage between the YEL wire terminal and the BLK wire terminal in the harness side of the 3-P connector.

(To next page)

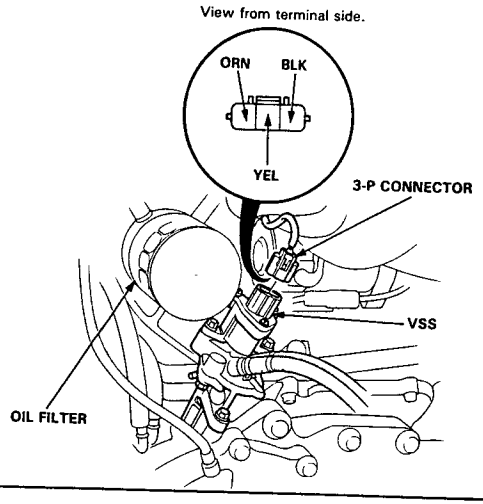

(From previous page)

- Is there battery voltage? — NO → Check for continuity between the BLK terminal and body ground.
  - Is there continuity? — NO → **Repair open between VSS and ground G101 via ECM.**
  - YES → **Repair open in the YEL wire, between VSS and under-dash fuse/relay box.**
- YES → Measure voltage between the ORN and the BLK wire terminals.
- Is there about 5 V? — NO → **Repair open in the ORN wire or short to body ground.**
- YES → Reconnect the 3-P connector to the VSS.
- Raise the front of the car and support it with safety stands.
- Touch a probe to the ORN wire and connect it to body ground through a voltmeter.
- Put the car in neutral with the ignition switch ON.
- Slowly rotate one wheel with the other wheel blocked.
- Does voltage pulse from 0 to about 5V? — NO → **Replace the VSS (see page 23-138).**
- YES → Disconnect the 13-P connector at the speedometer.
- Touch a probe to the ORN wire and connect it to body ground through a voltmeter.
- Slowly rotate one wheel with the other wheel blocked.
- Does the meter indicate pulsing voltage? — NO → **Repair open in the ORN wire between the VSS and the speedometer.**
- YES → **Replace the speedometer.**

Vehicle Speed Sensor (VSS)

Replacement

1. Disconnect the 3-P connector from the vehicle speed sensor (VSS).
2. Remove the mounting bolts, then remove the VSS.

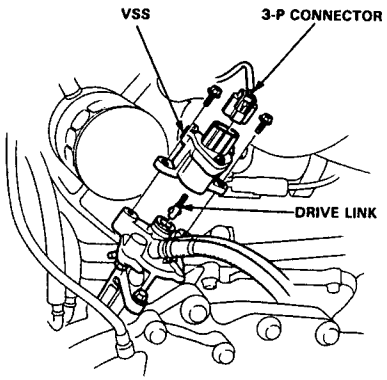

3. Install in the reverse order of removal.

   NOTE: The VSS drive link is a very small part; be careful not to lose it.

Warning System

Engine Oil Pressure Switch Test

1. Remove the YEL/RED wire from the engine oil pressure switch.

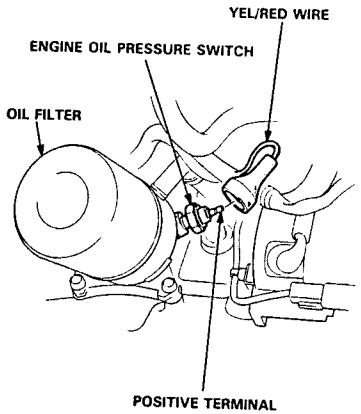

2. Check for continuity between the positive terminal and the engine (ground) with the ignition switch OFF.
   - If there is continuity, go on to step 3.
   - If there is no continuity, replace the switch.
3. Check for continuity again, this time with the engine running.
   - If there is no continuity, the switch is OK.
   - If there is continuity, do not replace the switch; first check other possible causes in step 4.
4. Make sure engine oil level is OK, then check engine oil pressure (see section 8).
   - If engine oil pressure is OK, replace the switch.
   - If engine oil pressure is low, remove, inspect, and, if necessary, replace the engine oil pump (see section 8).

Gauge Test

NOTE: Refer to page 23-131 for the fuel gauge system circuit.

1. Check the No. 1 (10 A) fuse in the under-dash fuse/relay box before testing.
2. Remove the access panel from the floor.
3. Disconnect the 3-P connector from the fuel gauge sending unit.

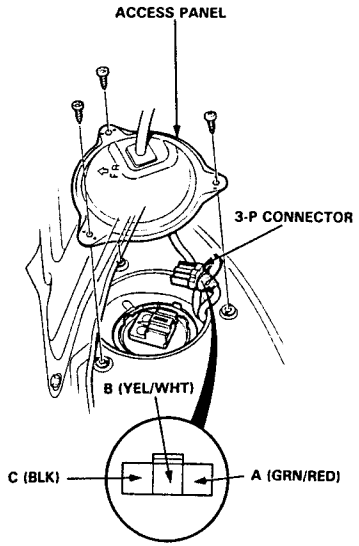

View from wire side.

4. Connect the voltmeter positive probe to the B (YEL/WHT) terminal and the negative probe to the C (BLK) terminal, then turn the ignition switch ON. There should be between 5 and 8 V.
   - If the voltage is as specified, go to step 5.
   - If the voltage is not as specified, check for:
   - An open in the YEL, YEL/WHT or BLK wire.
   - Poor ground (G501).
5. Turn the ignition switch OFF. Attach a jumper wire between the B (YEL/WHT) and C (BLK) terminals, then turn the ignition switch ON.
   Check that the pointer of the fuel gauge starts moving toward the "F" mark.

   CAUTION: Turn the ignition switch OFF before the pointer reaches "F" on the gauge dial. Failure to do so may damage the fuel gauge.

   NOTE: The fuel gauge is a bobbin (cross-coil) type, hence the fuel level is continuously indicated even when the ignition switch is OFF, and the pointer moves more slowly than that of a bimetal type.

   - If the pointer of the fuel gauge does not move at all, replace the gauge.
   - If the gauge is OK, inspect the fuel gauge sending unit.

Sending Unit Test

WARNING **Do not smoke while working on the fuel system. Keep open flames away from your work area.**

1. Remove the access panel from the floor.
2. With the ignition switch OFF, disconnect the 3-P connector from the fuel gauge sending unit.
3. Remove the fuel gauge sending unit.

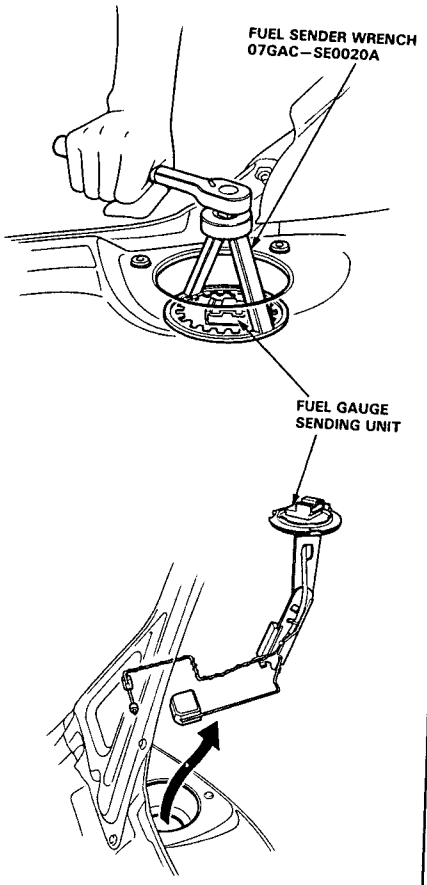

4. Measure the resistance between the B and C terminals at E (EMPTY), 1/2 (HALF FULL) and F (FULL) by moving the float.

Float Position	E	1/2	F
Length	18.7 mm (0.74 in)	80.7 mm (3.18 in)	152.8 mm (6.02 in)
Resistance (Ω)	105–110	25.5–39.5	2–5

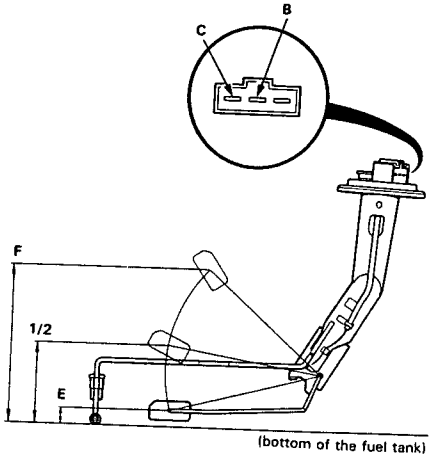

5. If unable to obtain the above readings, replace the fuel gauge sending unit.

Engine Coolant Temperature (ECT) Gauge

Gauge Test

NOTE: Refer to page 23-131 for the wiring description of the engine coolant temperature (ECT) gauge circuit diagram.

1. Check the No. 15 (10 A) fuse in the under-dash fuse/relay box before testing.
2. Make sure the ignition switch is OFF, then disconnect the RED wire from the ECT gauge sending unit and ground it with a jumper wire.

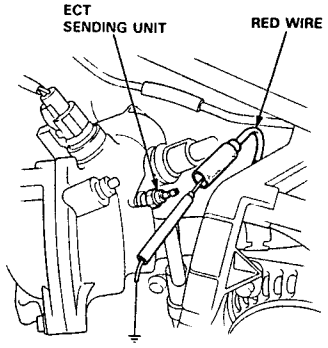

3. Turn the ignition switch ON.
   Check that the pointer of the ECT gauge starts moving toward the "H" mark.

   CAUTION: Turn the ignition switch OFF before the pointer reaches "H" on the gauge dial. Failure to do so may damage the gauge.

   - If the pointer of the gauge does not move at all, check for an open in the YEL or RED wire. If the wires are OK, replace the ECT gauge.
   - If the ECT gauge works, test the ECT sending unit.

ECT Sending Unit Test

1. Disconnect the RED wire from the ECT sending unit.
2. With the engine cold, use an ohmmeter to measure resistance between the positive terminal and the engine (ground).

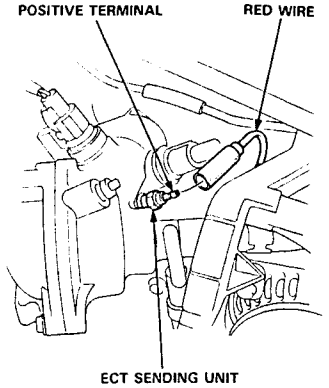

3. Check the temperature of the coolant.
4. Run the engine and measure the change in resistance with the engine at operating temperature (the radiator fan comes on).

Temperature	133 °F (56 °C) (Engine cold)	185 °F (85 °C)–212 °F (100 °C)
Resistance (Ω)	142	49–32

5. If the obtained readings are substantially different from the specifications above, replace the sending unit.

Brake Warning System

Parking Brake Switch Test

1. Remove the floor console and disconnect the connector from the switch.

2. There should be continuity between the positive terminal and body ground with the brake lever up. There should be no continuity with the brake lever down.

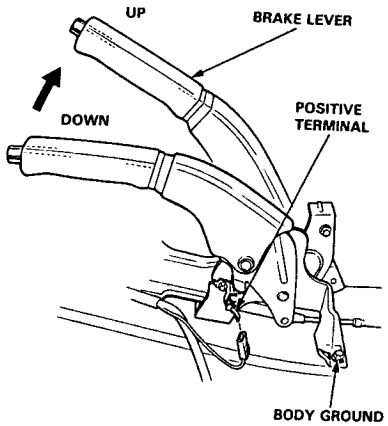

NOTE (Canada):
If the parking brake switch is OK, but the brake warning system does not function, perform the input test for the daytime running lights control unit (see page 23-180).

Brake Fluid Level Switch Test

1. Remove the reservoir cap. Check that the float moves up and down freely; if it doesn't, replace the reservoir cap assembly.

2. Check for continuity between the terminals with the float up and down. There should be continuity with the float down and no continuity with the float up. Replace the reservoir cap assembly if necessary.

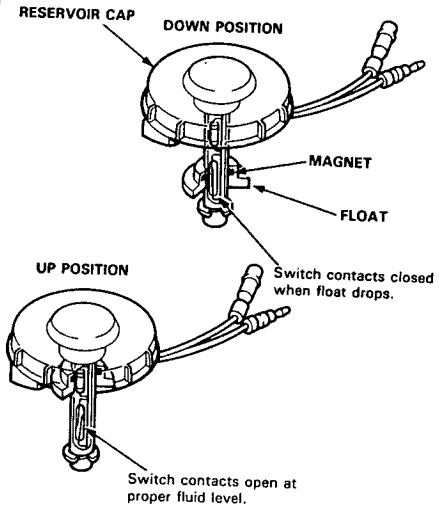

Seat Belt Reminder

Seat Belt Switch Test

1. Slide the driver's seat forward, then disconnect the 2-P connector from the seat belt switch.

2. There should be continuity between the A and B terminals when the driver's seat belt is not buckled. There should be no continuity when the driver's seat belt is buckled.

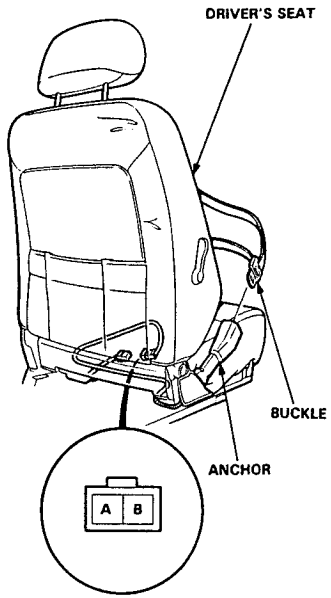

Low Fuel Indicator

Indicator Light Test

NOTE: Refer to page 23-131 for the wiring description of the low fuel indicator circuit.

1. Park car on level ground.

   ⚠WARNING Do not smoke while working on the fuel system. Keep open flames away from your work area. Drain fuel only into an approved container.

2. Drain fuel tank into an approved container. Then install the drain bolt with a new washer.

3. Add less than 8.5ℓ (2.2 U.S.Gal, 1.8 Imp.Gal) of fuel and turn the ignition switch on. The low fuel indicator light should come on within four minutes.

4. Then add approx. 4ℓ (1.1 U.S.Gal, 0.9 Imp.Gal) of fuel.

   - The light should go out within four minutes.

   - If the light did not come on in step 3, remove the access panel and disconnect the 3-P connector from the fuel gauge sending unit. Connect the A (GRN/RED) terminal to the C (BLK) terminal with a jumper wire.

     – If the light comes on, the problem is either the sending unit or its ground.
     – If the light does not come on, the problem is an open in the GRN/RED wire to the gauge assembly, no power to the gauge, or a blown bulb.

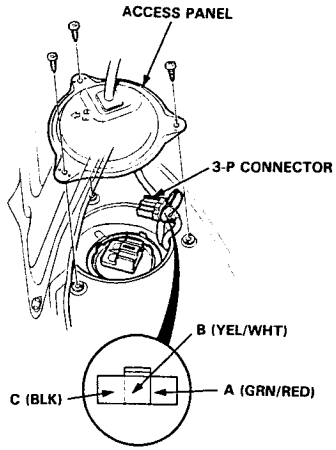

View from wire side

Interlock System

Component Location Index

CAUTION:
- All SRS electrical wiring harnesses are covered with yellow outer insulation.
- Before disconnecting the SRS wire harness, install the short connector (s) on the airbag (s).
- Replace the entire affected SRS harness assembly if it has an open circuit or damaged wiring.

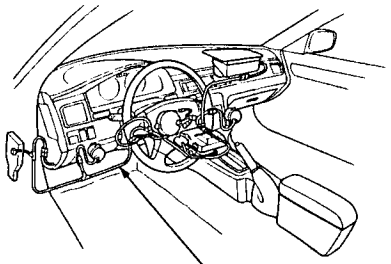

A/T GEAR POSITION INDICATOR
See page 23-158
A/T GEAR POSITION SWITCH
Test, page 23-162

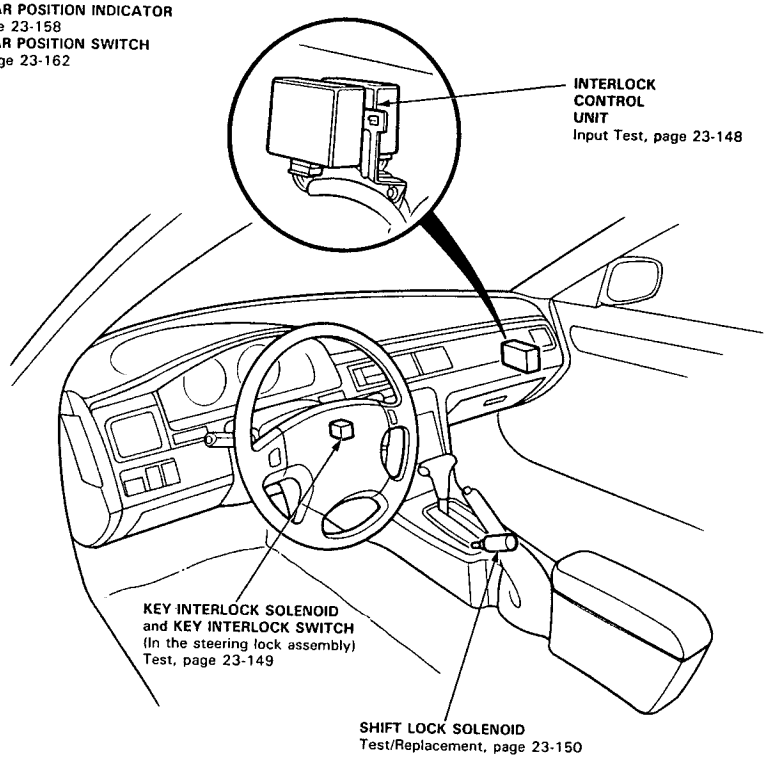

Description

The car is equipped with the following devices to prevent inadvertent shifting:

- A/T shift lever with shift lock
- Key cylinder with interlocked ignition key

Shift Lock System:
The shift lock system prevents the shift lever from moving to [R] or [D4] from the [P] position unless the brake pedal is depressed and the accelerator is in its rest position.

NOTE:
- The shift lever cannot be shifted when the brake pedal and the accelerator are depressed on at the same time.
- In case of system malfunction, the shift lever can be released by pushing a key into the release slot near the shift lever.

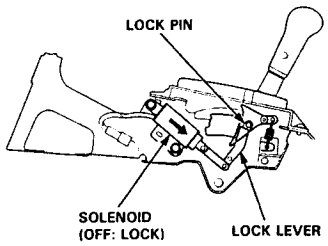

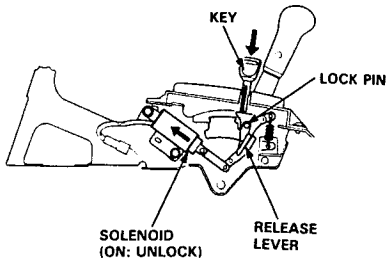

Key Interlock System:
The ignition key cannot be removed from the ignition switch unless the shift lever is in the [P] position.
If the key is inserted when the shift lever is in any position other than [P], a solenoid is activated, making it impossible for the key to be removed until the shift lever is moved to the [P] position.

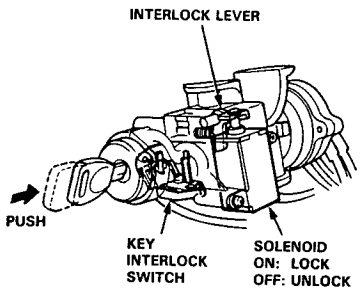

The shift lever is the [P] position.

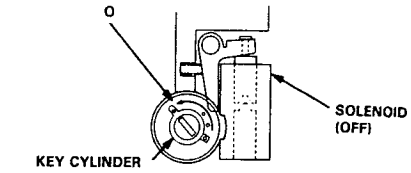

The shift lever is in any position except [P].

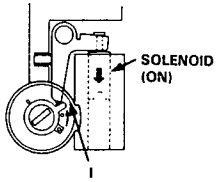

Interlock System

Circuit Diagram

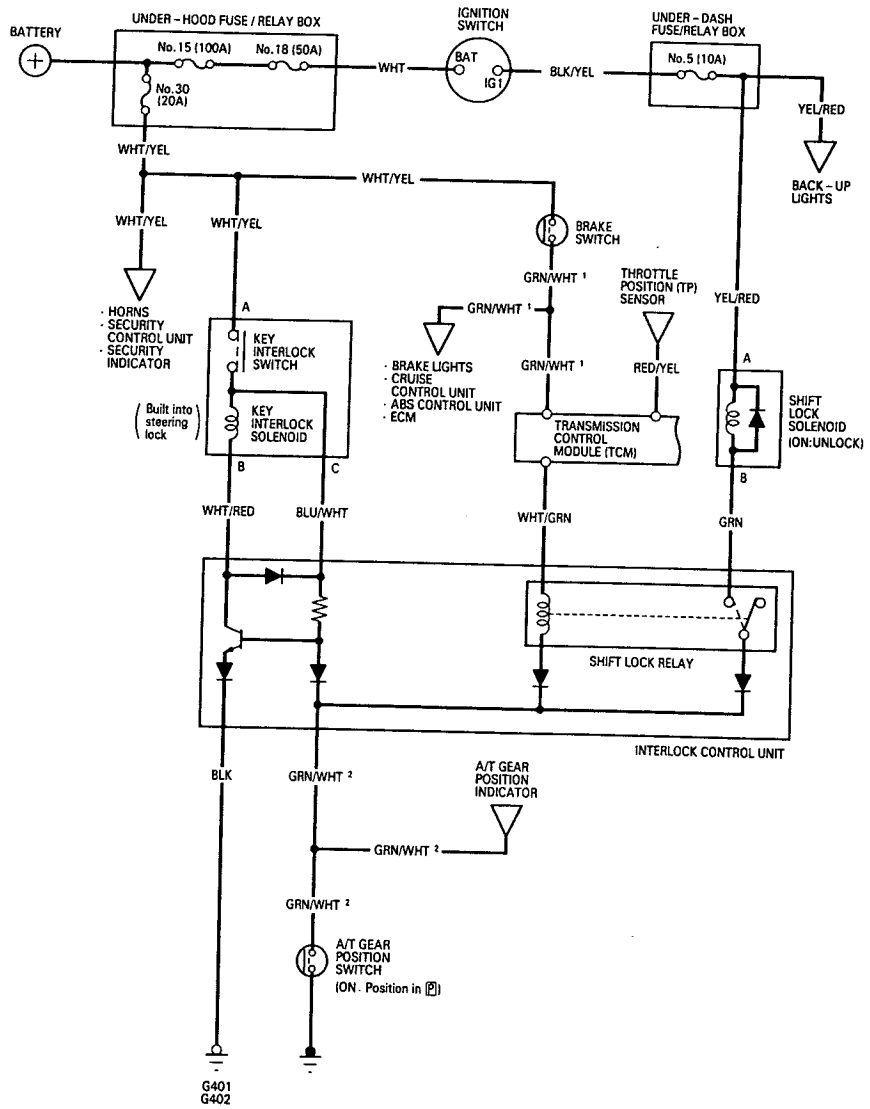

Control Unit Input Test

CAUTION:

- **All SRS electrical wiring harnesses are covered with yellow outer insulation.**
- **Before disconnecting the SRS wire harness, install the short connector (s) on the airbag (s).**
- **Replace the entire affected SRS harness assembly if it has an open circuit or damaged wiring.**

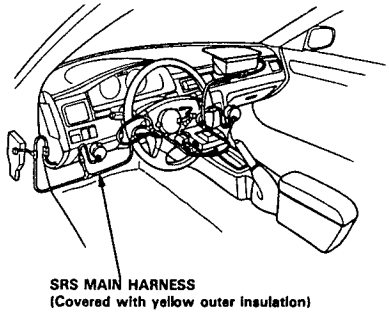

Disconnect the 8-P connector from the control unit. Inspect the connector terminals to be sure they are all making good contact.

- If the terminals are bent, loose, or corroded, repair them as necessary, and recheck the system.
- If the terminals look OK, make the following input tests at the connector terminals.
  - If any test indicates a problem, find and correct the cause, then recheck the system.
  - If all the input tests prove OK, the control unit must be faulty; replace it.

NOTE: If the shift lock solenoid clicks when the ignition switch is ON and the brake pedal is pushed (the shift lever is in the P position), the shift lock system is electronically normal. If the shift lever can not be shifted from P position, see section 14.

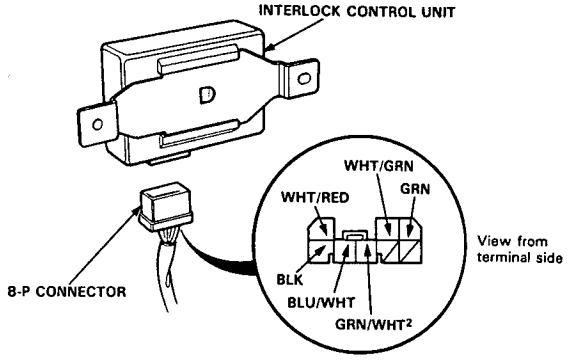

(cont'd)

Control Unit Input Test (cont'd)

Shift Lock System:

No.	Wire	Test condition	Test: Desired result	Possible cause if result is not obtained
1	WHT/GRN	Ignition switch ON. Brake pedal pushed.	Check for voltage to ground: There should be battery voltage.	• Blown No. 30 (20 A) fuse (in the under-hood fuse/relay box). • Faulty brake switch. • Faulty throttle position (TP) sensor. • Faulty transmission control module (TCM). • An open in the wire.
		Ignition switch ON. Step on the brake pedal and the accelerator at the same time.	Check for voltage to ground: There should not be battery voltage.	
2	GRN/WHT²	Shift lever position in [P].	Check for continuity to ground: There should be continuity.	• Faulty A/T gear position switch. • Poor ground. • An open in the wire.
3	GRN	Ignition switch ON.	Check for voltage to ground: There should be battery voltage.	• Blown No. 5 (10 A) fuse (in the under-dash fuse/relay box). • Faulty shift lock solenoid. • An open in the wire.

Key Interlock System:

No.	Wire	Test condition	Test: Desired result	Possible cause if result is not obtained
1	BLK	Under all conditions.	Check for voltage to ground: There should be continuity.	• Poor ground (G401, G402). • An open in the wire.
2	GRN/WHT²	Shift lever position in [P].	Check for continuity to ground: There should be continuity.	• Faulty A/T gear position switch. • Poor ground. • An open in the wire.
3	WHT/RED	Ignition switch turned to ACC and the key pushed in.	Check for voltage to ground: There should be battery voltage.	• Blown No. 30 (20 A) fuse (in the under-hood fuse/relay box). • Faulty steering lock assembly (key interlock solenoid). • An open in the wire.
4	BLU/WHT	Ignition switch turned to ACC and the key pushed in.	Check for voltage to ground: There should be battery voltage.	• Blown No. 30 (20 A) fuse (in the under-hood fuse/relay box). • Faulty steering lock assembly (key interlock solenoid). • An open in the wire.

Key Interlock Solenoid Test

CAUTION:
- **All SRS electrical wiring harnesses are covered with yellow outer insulation.**
- **Before disconnecting the SRS wire harness, install the short connector (s) on the airbag (s).**
- **Replace the entire affected SRS harness assembly if it has an open circuit or damaged wiring.**

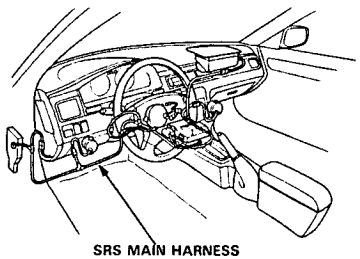

SRS MAIN HARNESS
(Covered with yellow outer insulation)

1. Remove the dashboard lower cover.
2. Remove the knee bolster.
3. Disconnect the 8-P connector from the main wire harness.

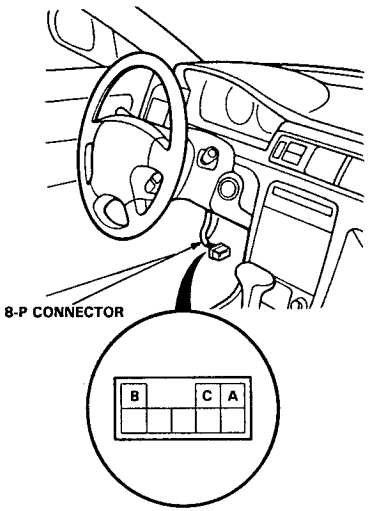

View from wire side

4. Check for continuity between the terminals in each switch position according to the table.

Position	Terminal	A	B	C
Ignition switch ACC	Key pushed in.	○	○	○
	Key released. *		○	○

*: 15 – 20 ohms

5. Check that the key cannot be removed when battery power and ground are connected to the A and B terminals.
   - If the key can not be removed, the key interlock solenoid is OK.
   - If the key can be removed, replace the steering lock assembly (key interlock solenoid is not available separately).

Interlock System

Shift Lock Solenoid Test/Replacement

1. Remove the console, then disconnect the 2-P connector of the shift lock solenoid from the main wire harness.

   NOTE: Do not connect power to the B (−) terminal (reverse polarity) or you will damage the diode inside the solenoid.

2. Connect battery power to the A terminal, ground the B terminal momentarily, and check solenoid operation.

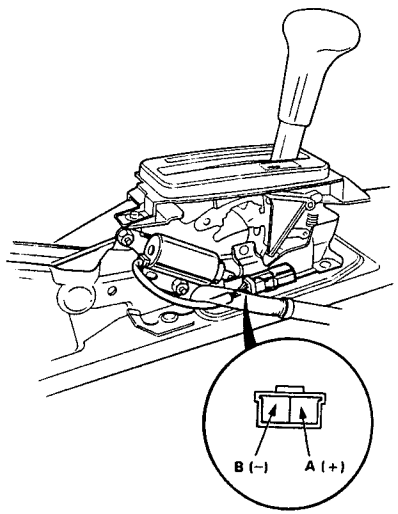

View from wire side

- If the solenoid does not operate, replace it as described in steps 3, 4, and 5.
- If the solenoid does operate, check and, if necessary, adjust its two positions as shown in step 5.

3. Remove the E-ring and the solenoid pin.

4. Remove the self-locking nuts and shift lock solenoid, then install the new solenoid in the reverse order of removal.

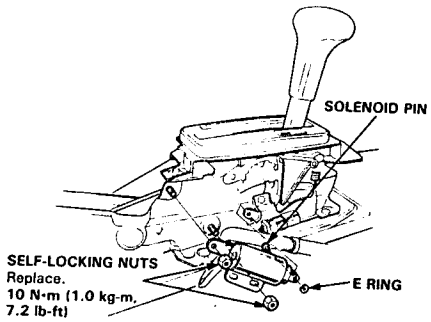

5. Check and, if necessary, adjust the solenoid's position.

   - When the shift lock solenoid is ON, check that there is a clearance of 2.5±0.5 mm (0.098±0.020 in) between the top rear corner of the shift lock lever and the lock pin groove, then tighten the self-locking nuts.

   NOTE: Use new self-locking nuts.

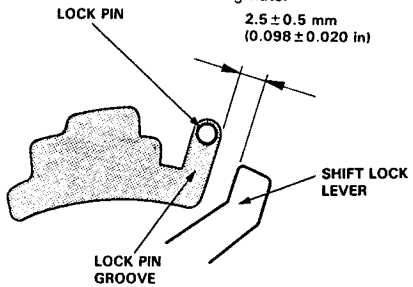

   - When the shift lock solenoid is OFF, make sure that the lock pin is blocked by the shift lock lever.

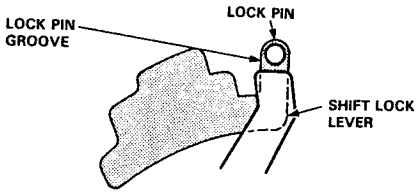

Safety Indicator

Component Location Index

CAUTION:
- All SRS electrical wiring harnesses are covered with yellow outer insulation.
- Before disconnecting the SRS wire harness, install the short connector (s) on the airbag (s).
- Replace the entire affected SRS harness assembly if it has an open circuit or damaged wiring.

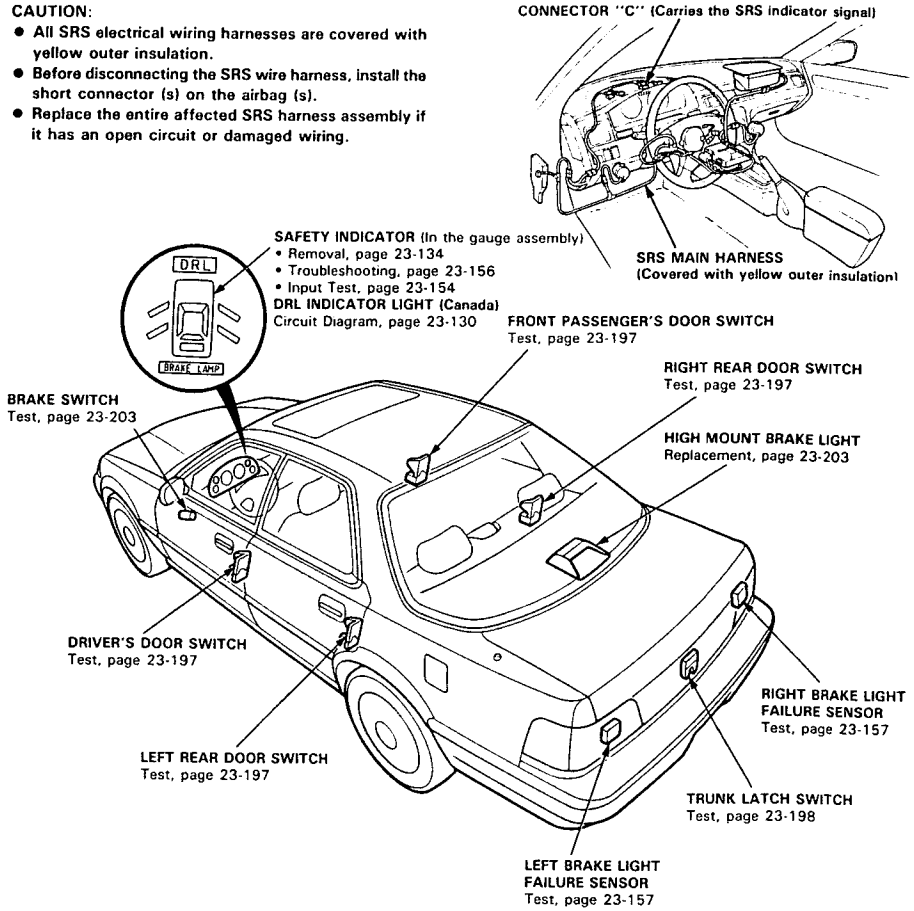

Description

Safety Indicator System:
Bulbs are used to indicate when the trunk lid or a door is not fully closed, or when a brake light is faulty. The bulbs will remain ON for about two seconds after the ignition switch has been turned ON to show that the system circuit is functioning.

Brake Light Bulb Failure Indicator:
If all brake light bulbs are OK, the indicator light stays off because the WHT/GRN wire is constantly being grounded by the two brake light failure sensors connected in series. With the brake light off, the ground is provided through the diode, the failure sensor relay coil and the bulb filaments to ground. With the brake light on, all five relays (three in the left sensor, two in the right sensor), connected in series, supply ground. If any of the four bulbs are not working, the chain is broken and the WHT/GRN wire is not being grounded. The indicator light comes on.

Circuit Diagram

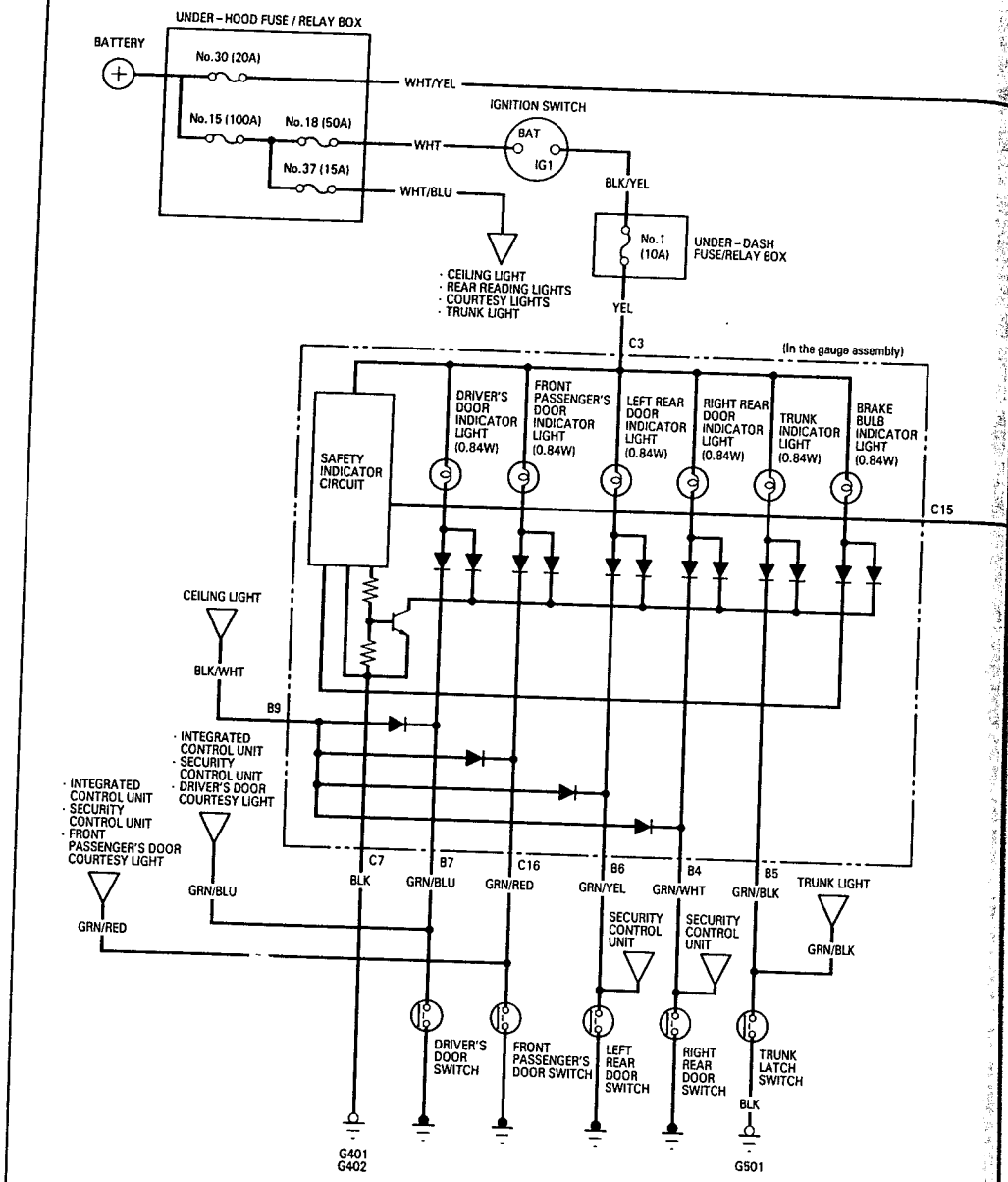

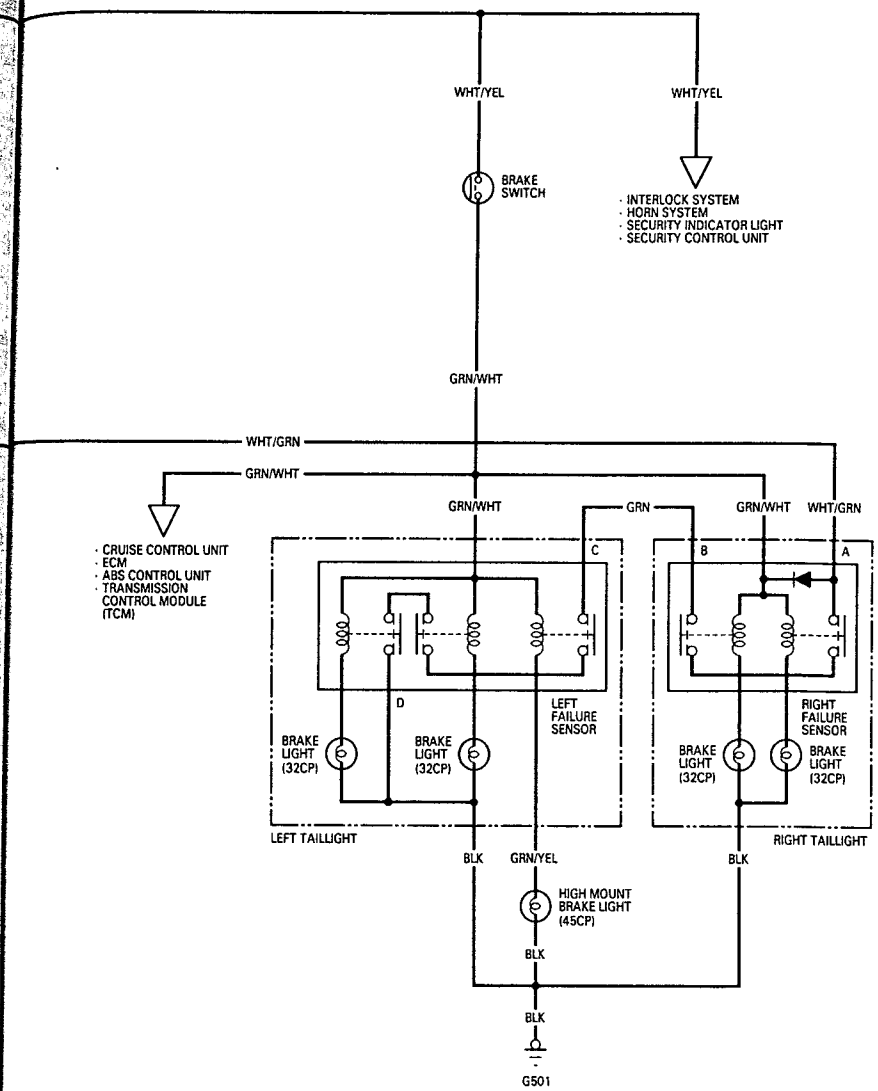

Indicator Input Test

CAUTION:
- **All SRS electrical wiring harnesses are covered with yellow outer insulation.**
- **Before disconnecting the SRS wire harness, install the short connector (s) on the airbag (s).**
- **Replace the entire affected SRS harness assembly if it has an open circuit or damaged wiring.**

Remove the gauge assembly from the dashboard (see page 23-132), and disconnect the 10-P and 16-P connectors from the gauge assembly. Inspect the connector terminals to be sure they are all making good contact.

- If the terminals are bent, loose, or corroded, repair them as necessary, and recheck the system.
- If the terminals look OK, make the following input tests at the connector terminals.
  - If any test indicates a problem, find and correct the cause, then recheck the system.
  - If all the input tests prove OK, the control unit must be faulty; replace it.

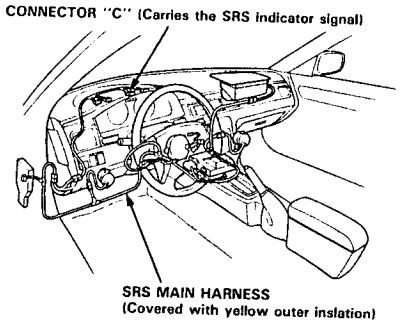

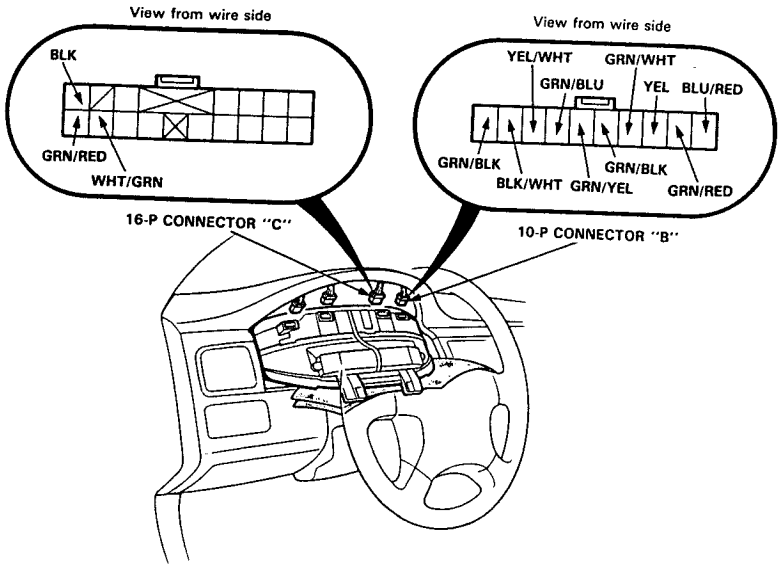

No.	Wire	Test condition	Test: Desired result	Possible cause if result is not obtained
1	BLK	Under all conditions.	Check for continuity to ground: There should be continuity.	• Poor ground (G401). • An open in the wire.
2	YEL	Ignition switch ON.	Check for voltage to ground: There should be battery voltage.	• Blown No. 1 (10 A) fuse (in the under-dash fuse/relay box). • An open in the wire.
3	WHT/GRN	Brake pedal pushed.	Check for continuity to ground: There should be less than 200 ohms with the pedal pushed.	• Blown No. 30 (20 A) fuse (in the under-hood fuse/relay box). • Faulty brake switch. • Blown brake light bulbs. • Faulty brake light failure sensors. • Poor ground (G501). • An open in the wire.
4	GRN/BLK	Trunk lid opened.	Check for continuity to ground: There should be continuity. NOTE: Before testing, remove No. 37 (15 A) fuse in the under-hood fuse/relay box.	• Faulty trunk latch switch. • An open in the wire.
5	BLK/WHT	Ceiling light switch in MIDDLE position.	Connect to ground: ceiling light should come on .	• Blown No. 37 (15 A) fuse (in the under-hood fuse/relay box). • Faulty ceiling light. • An open in the wire.
6	GRN/BLU	Driver's door opened.	Check for continuity to ground: There should be continuity. NOTE: Before testing, remove No. 37 (15 A) fuse in the under-hood fuse/relay box.	• Faulty door switch. • An open in the wire.
	GRN/RED	Front passenger's door opened.		
	GRN/YEL	Left Rear door opened.		
	GRN/WHT	Right door opened.		

Troubleshooting

NOTE: The numbers in the table show the troubleshooting sequence.

Symptom \ Item to be inspected	Blown No. 1 (10 A) fuse (In the under-dash fuse/relay box)	Blown No. 37 (15 A) fuse (In the under-hood fuse/relay box)	Safety indicator input test	Blown bulb	Brake light failure sensor	Door switch	Trunk latch switch	Poor ground	Open circuit, loose or disconnected terminals
No indicators operate.	1		2					G401 G402	YEL
Indicator panel illumination not lit with combination light switch ON.				1					RED/BLK or RED
Indicator lights do not come on when ignition switch is turned to ON.			1						
Door indicator lights do not come on with doors opened.			2			1			GRN/BLU GRN/RED GRN/YEL or GRN/WHT
Trunk indicator light does not come on with trunk lid opened.		1	3				2		GRN/BLK
Brake Indicator light does not come on with blown brake light bulb.			1						WHT/GRN or GRN
Brake Indicator light remains on with good brake light bulbs.			2		1			G501	

Bulb Replacement

Remove the sub printed circuit board "A" from the housing (see page 23-134).

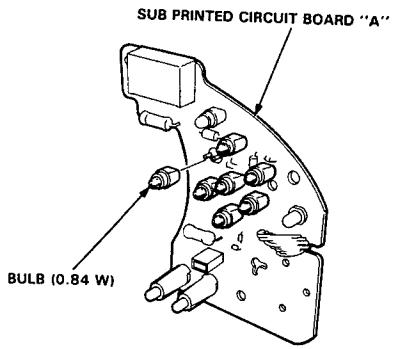

Brake Light Failure Sensor Test

1. First make sure the brake lights come on when the brake pedal is pressed.
   - If all the brake lights come on, go to step 2.
   - If one of the brake lights does not come on, check whether the bulb is blown. If the bulb is OK, go to step 2.
   - If none of the brake lights come on, check the brake light circuit (see page 23-153).
2. Open the trunk lid and the taillight access panel to the right taillight. Remove the bulb socket housing. Watch the BRAKE LAMP light in the safety indicator when the A (WHT/GRN) wire of the 6-P connector is grounded and the ignition switch is turned from OFF to ON.

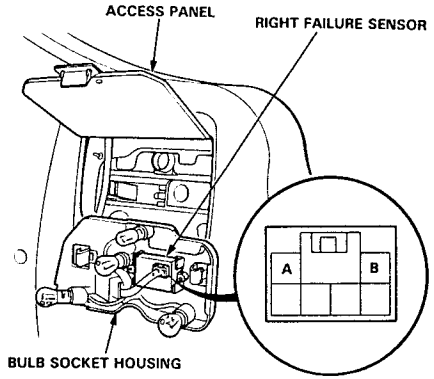

View from wire side

   - If the BRAKE LAMP light comes on and stays on, check for an open in the A (WHT/GRN) wire between the safety indicator and the right failure sensor.
   - If the BRAKE LAMP light does not stay on, go to step 3.
3. Watch the BRAKE LAMP light when the ignition switch is turned from OFF to ON with the B (GRN) wire of the 6-P connector grounded and the brake pedal pressed.
   - If the BRAKE LAMP light comes on and stays on, replace the right failure sensor.
   - If the BRAKE LAMP light does not stay on, go to step 4.
4. Open the taillight access panel to the left taillight. Remove the bulb socket housing. Watch the BRAKE LAMP light when the ignition switch is turned from OFF to ON with the C (GRN) wire of the 6-P connector grounded and the brake pedal pressed.

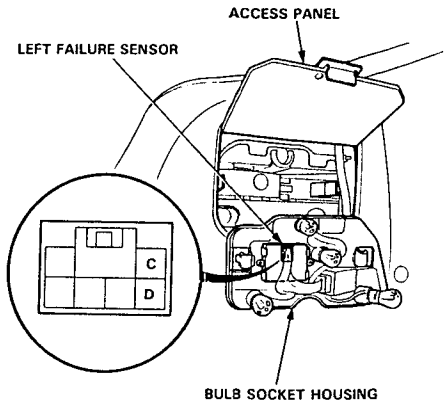

   - If the BRAKE LAMP light comes on and stays on, there is an open in the C (GRN) wire between the left failure sensor and the right failure sensor.
   - If the BRAKE LAMP light does not stay on, go to step 5.
5. Watch the BRAKE LAMP light when the ignition switch is turned from OFF to ON with the D (BLK) wire of the 6-P connector grounded and the brake pedal pressed.
   - If the BRAKE LAMP light comes on and stays on, replace the left failure sensor.
   - If the BRAKE LAMP light does not stay on, check for an open in the D (BLK) wire between the left failure sensor and ground, and check for a poor ground at G501.

Component Location Index

CAUTION:
- All SRS electrical wiring harnesses are covered with yellow outer insulation.
- Before disconnecting the SRS wire harness, install the short connector (s) on the airbag (s).
- Replace the entire affected SRS harness assembly if it has an open circuit or damaged wiring.

GAUGE ASSEMBLY
- Removal, page 23-132
- Disassembly, page 23-134

INTERLOCK SYSTEM
See page, 23-145

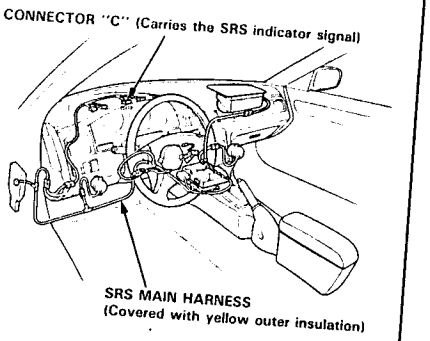

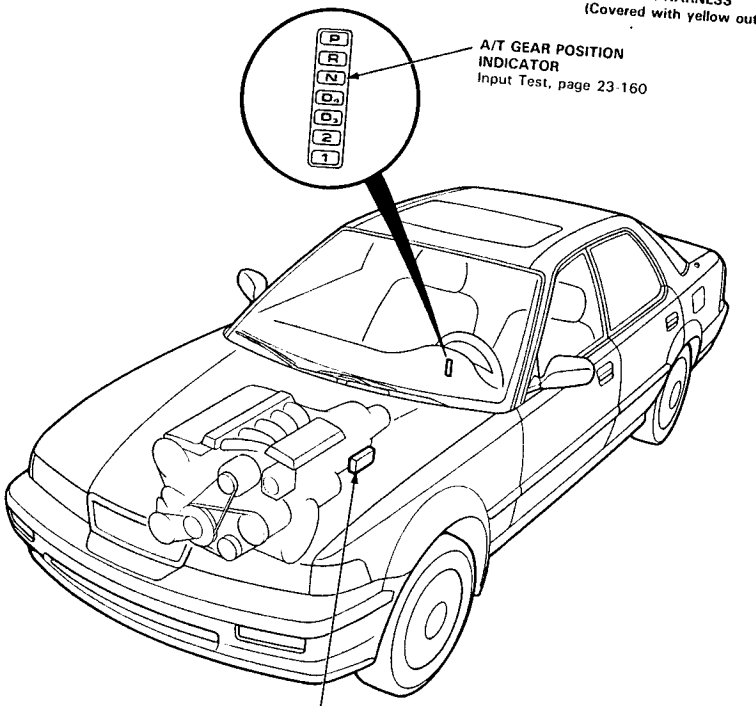

Circuit Diagram

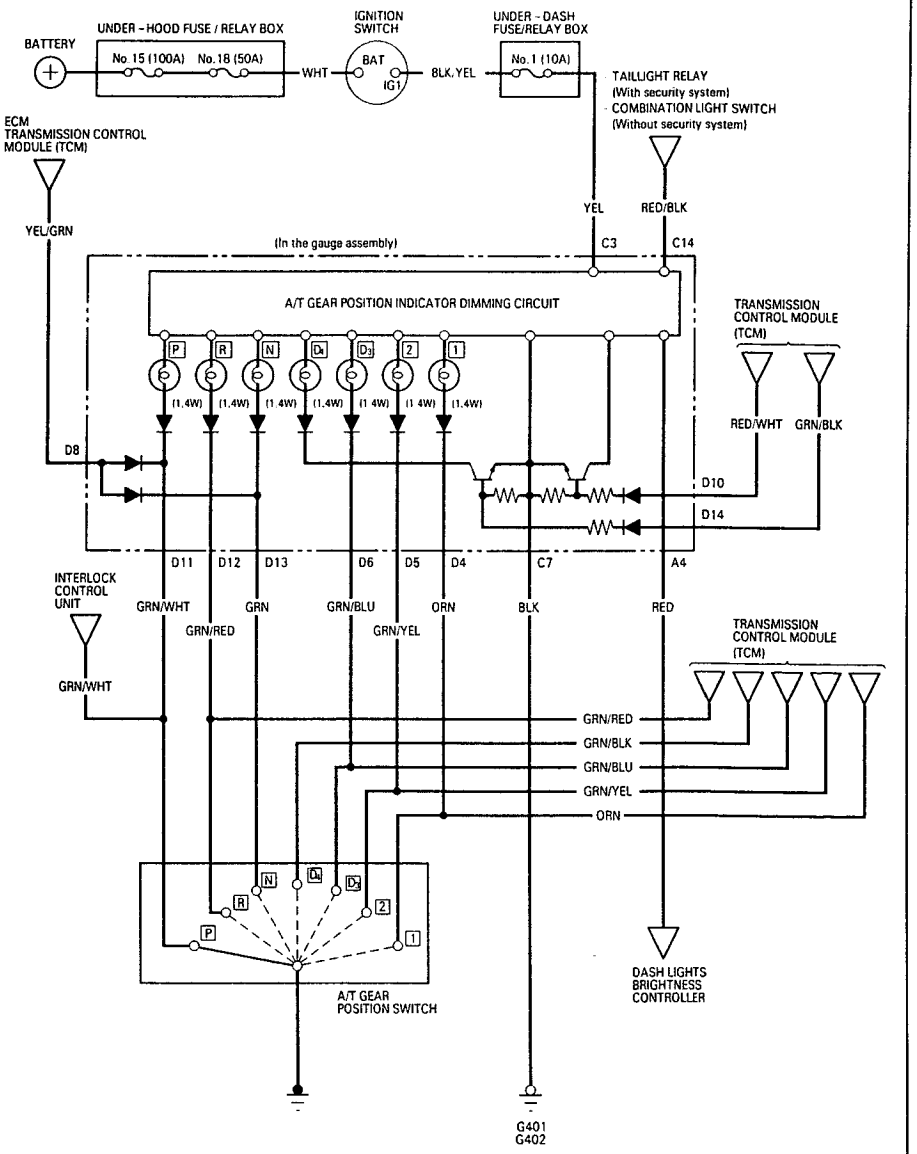

Indicator Input Test

CAUTION:
- All SRS electrical wiring harnesses are covered with yellow outer insulation.
- Before disconnecting the SRS wire harness, install the short connector (s) on the airbag (s).
- Replace the entire affected SRS harness assembly if it has an open circuit or damaged wiring.

Pry the gauge assembly out of from the dashboard (see page 23-132), and disconnect the 14-P connector from the gauge assembly. Inspect the connector terminals to be sure they are all making good contact.

- If the terminals are bent, loose or corroded, repair them as necessary, and recheck the system.
- If the terminals look OK, make the following input tests at the connector terminals.
  - If any test indicates a problem, find and correct the cause, then recheck the system.
  - If all the input tests prove OK, the gauge assembly must be faulty; replace it.

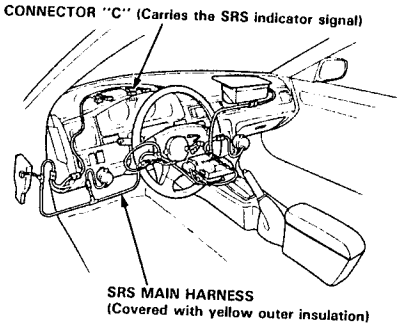

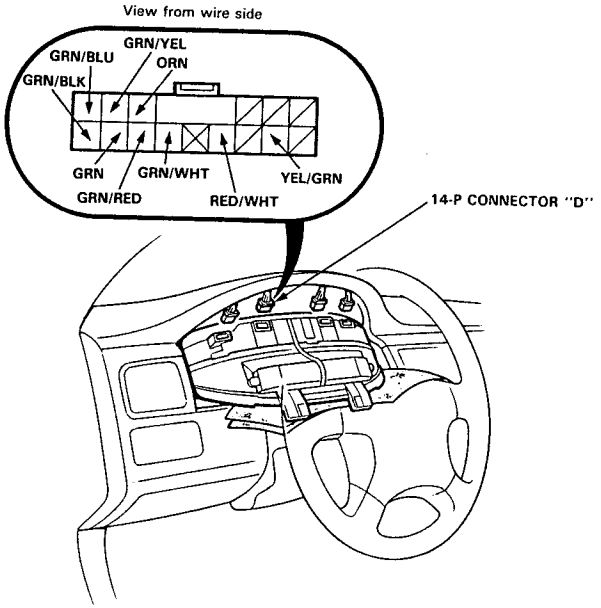

No.	Wire	Test condition	Test: Desired result	Possible cause if result is not obtained
1	BLK	Under all conditons.	Check for continuity to ground: There should be continuity.	• Poor ground (G401, G402). • An open in the wire.
2	YEL	Ignition switch ON.	Check for voltage to ground: There should be battery voltage.	• Blown No.1 (10 A) fuse (in the under-dash fuse/relay box). • An open in the wire.
3	GRN/WHT	Shift lever position in [P].	Check for continuity to ground: There should be continuity. NOTE: There should be no continuity in any other position.	• Faulty A/T gear position switch. • Poor ground. • An open in the wire.
	GRN/RED	Shift lever position in [R].		
	GRN	Shift lever position in [N].		
	GRN/BLU	Shift lever position in [D3].		
	GRN/YEL	Shift lever position in [2].		
	ORN	Shift lever position in [1].		
4	GRN/BLK	Ignition switch ON and shift lever position in [D4].	Check for voltage to ground: There should be battery voltage.	• Faulty A/T gear position switch. • Faulty Transmission control module (TCM) • Poor ground. • An open in the wire.
5	RED/BLK and RED	Combination light switch ON and dash lights brightness control dial on full bright.	Check for voltage between RED/BLK and RED terminals: There should be battery voltage.	• Faulty dash lights brightness control system. • An open in the wire.
6	GRN/BLK	Ignition switch ON and shift lever in any position except [D4].	Check for voltage to ground: There should be less than 1 V for two seconds after the ignition switch is turned ON and more than battery voltage two seconds later.	• Fauly Transmission control module (TCM). • An open in the wire.
7	RED/WHT	Ignition switch ON and shift lever in any position except [D4].	Check for voltage to ground: There should be less than 1 V for two seconds after the ignition switch is turned ON and more than 5 V two seconds later.	• Fauly Transmission control module (TCM). • An open in the wire.
8	YEL/GRN	Ignition switch ON.	Check for voltage to ground: There should be more than 5 V.	• Faulty Transmission control module (TCM) or ECM. • An open in the wire.

A/T Gear Position Indicator

A/T Gear Position Switch Test

1. Raise the car and remove the transmission splash shield (see section 14).
2. Disconnect the 14-P connector from the A/T gear position switch.
3. Check for continuity between the terminals in each switch position according to the table.
   - Move the shift lever back and forth without touching the push button at each switch position, and check for continuity within the range of free play of the shift lever.
   - If there's no continuity within the range of free play, adjust the position of the A/T gear position switch (see section 14)

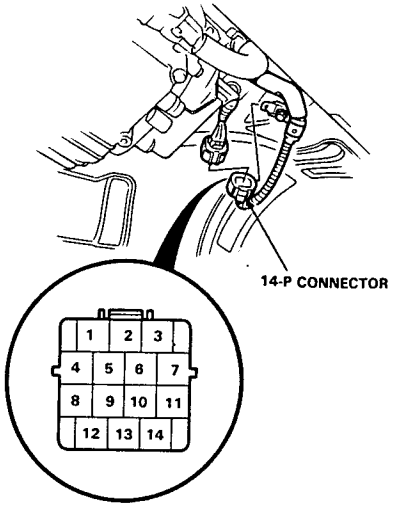

A/T Gear Position Switch										Back-up Light Switch		Neutral Position Switch	
Position \ Terminal	Body Ground	6	7	8	9	11	5	4	2	12	14	Body Ground	10
1	○				○								
2	○			○		○							
D3	○		○			○							
D4	○	○				○							
N	○						○					○	○
R	○							○		○	○		
P	○								○			○	○

Bulb Replacement

CAUTION:
- All SRS electrical wiring harnesses are covered with yellow outer insulation.
- Before disconnecting the SRS wire harness, install the short connector (s) on the airbag (s).
- Replace the entire affected SRS harness assembly if it has an open circuit or damaged wiring.

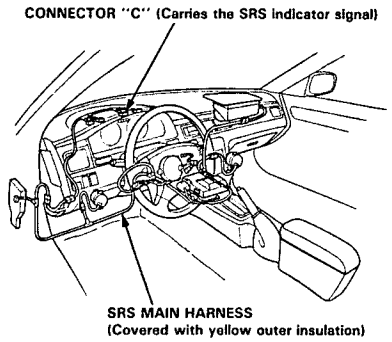

1. Remove the gauge assembly (see page 23-132).
2. Disassemble the gauge assembly (see page 23-134).
3. Remove the bulb.

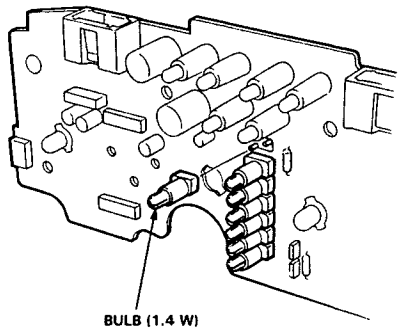

4. Installation is in the reverse order of removal.

Circuit Diagram

Description

The integrated control unit located on the left kick panel, integrates the functions of the seat belt reminder, key – in warning, side marker light flasher, wiper/washer circuit, lights – on reminder circuit, rear window defogger timer circuit, entry light timer circuit, power window key – off timer circuit, and oil pressure indicator flasher circuit onto one circuit board, sharing common circuit functions.

NOTE: Different wires with the same color have been given a number suffix to distinguish them (for example, GRN/RED [1] and GRN/RED [2] are not the same).

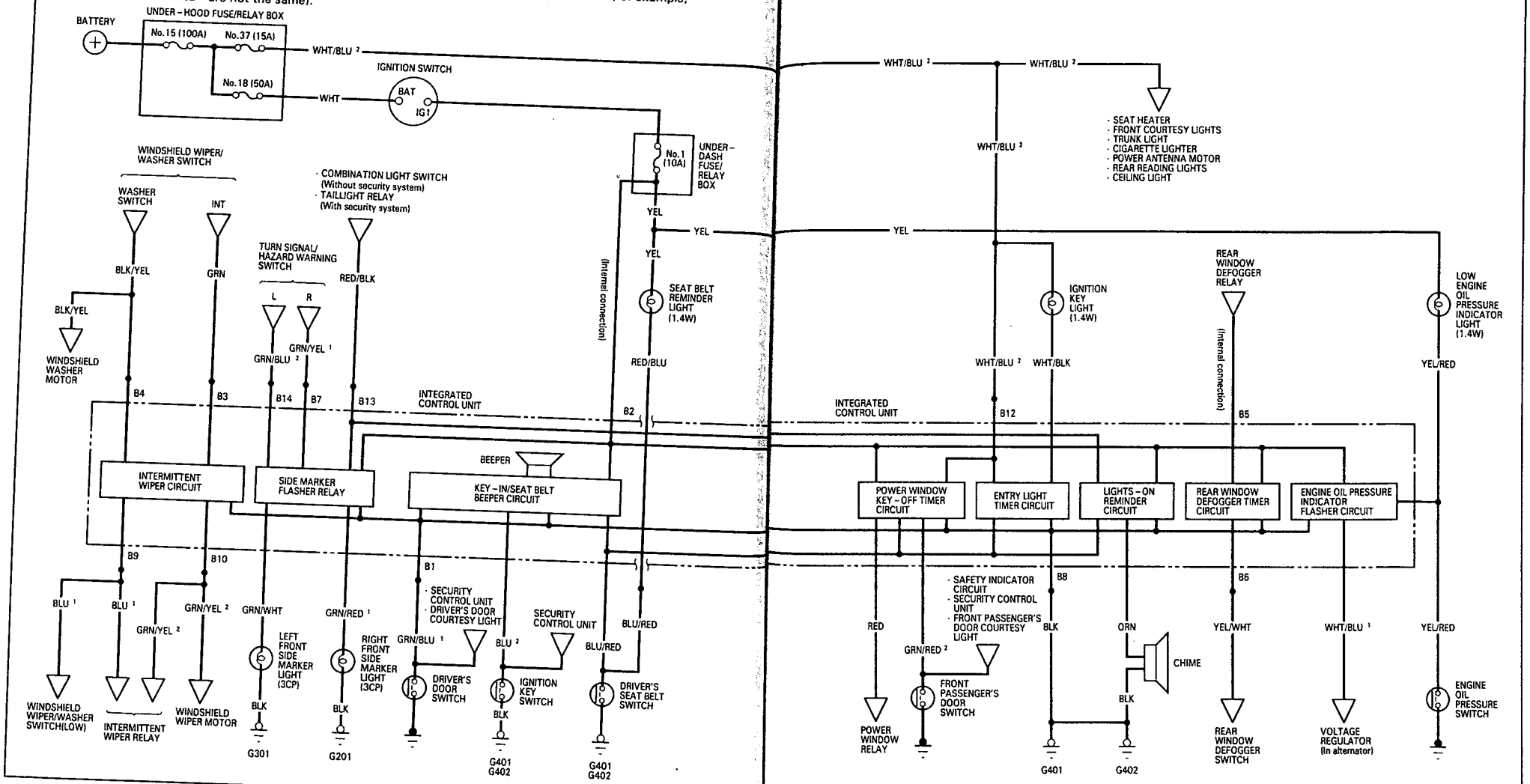

Input Test

CAUTION:
- All SRS electrical wiring harnesses are covered with yellow outer insulation.
- Before disconnecting the SRS wire harness, install the short connector (s) on the airbag (s).
- Replace the entire affected SRS harness assembly if it has an open circuit or damaged wiring.

Remove the left side kick panel cover, then disconnect the 16-P connector from the integrated control unit. Remove the integrated control unit from the under-dash fuse/relay box.

Inspect the connector terminals to be sure they are all making good contact.

- If the terminals are bent, loose or corroded, repair them as necessary, and recheck the system.
- If the terminals look OK, make the following input tests at the connector terminals.
  - If any test indicates a problem, find and correct the cause, then recheck the system.
  - If all the input tests prove OK, the control unit must be faulty; replace it.

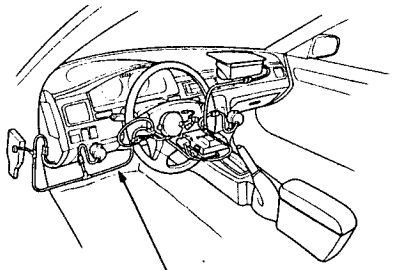

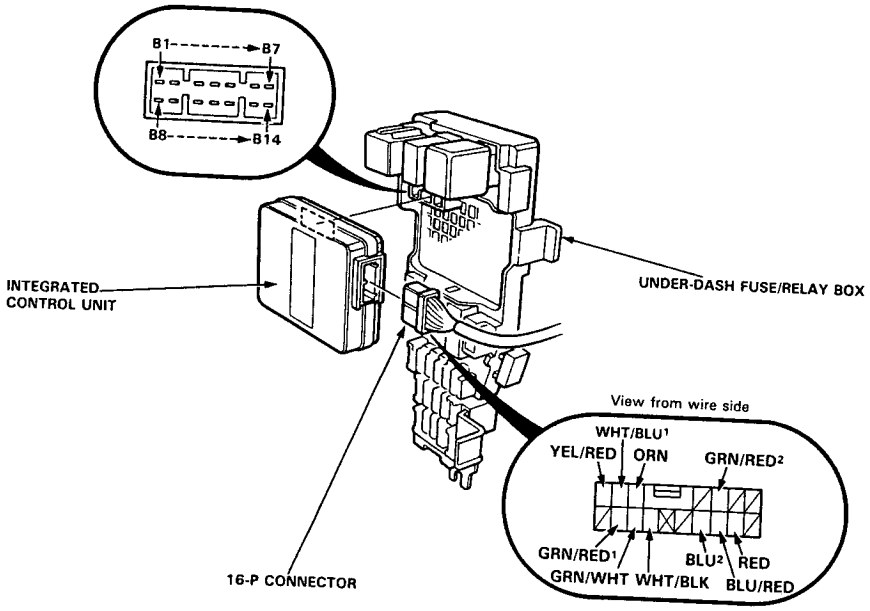

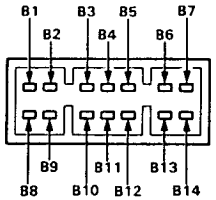

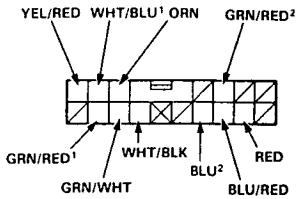

View from wire side

Intermittent Wiper System:

No.	Terminal	Test condition	Test: Desired result	Possible cause if result is not obtained
1	B8	Under all conditons.	Check for continuity to ground: There should be continuity.	• Poor ground (G401, G402). • An open in the wire.
2	B9	Wiper switch at LOW.	Check for continuity to ground: There should be continuity.	• Faulty wiper switch. • An open in the wire. • Poor ground (G401, G402).
3	B3	Ignition switch ON and wiper switch at INT.	Check for voltage to ground: There should be battery voltage.	• Blown No.1 (10 A) fuse (in the under-dash fuse/relay box). • An open in the wire
4	B4	Ignition switch ON and washer switch ON.	Check for voltage to ground: There should be battery voltage.	• Blown No.5 (10 A) fuse (in the under-dash fuse/relay box). • Faulty washer switch. • An open in the wire.
5	B10	Ignition switch ON.	Check for voltage to ground: There should be battery voltage.	• Blown No.6 (30 A) fuse (in the under-dash fuse/relay box). • An open in the wire.

Side Marker Light Flasher System:

No.	Terminal	Test condition	Test: Desired result	Possible cause if result is not obtained
1	B8	Under all conditions.	Check for continuity to ground: There should be continuity.	• Poor ground (G401, G402). • An open in the wire.
2	B2	Ignition switch ON.	Check for voltage to ground: There should be battery voltage.	• Blown No.1 (10 A) fuse (in the under-dash fuse/relay box). • An open in the wire.
3	B13	Combination light switch ON.	Check for voltage to ground: There should be battery voltage.	• Blown No. 21 (20 A) fuse (in the under-hood fuse/relay box). • Faulty combination light switch (without security system). • Faulty taillight relay (with security system). • An open in the wire.
4	B14	Ignition switch ON and turn signal switch in left turn position.	Check for voltage to ground: There should be 0-12-0-12 repeatedly.	• Blown No. 1 (10 A) fuse (in the under-dash fuse/relay box). • Faulty turn signal system. • An open in the wire.
5	B7	Ignition switch ON and turn signal switch in right turn position.		
6	GRN/WHT	Connect the B2 terminal to the GRN/WHT (or GRN/RED¹) terminal.	Check front side marker light operation: Left (or Right) front side marker light should come on as the battery is connected.	• Blown bulb • Poor ground G301 (or G201). • An open in the wire.
7	GRN/RED¹			

(cont'd)

Input Test (cont'd)

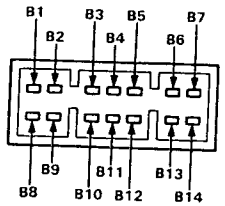

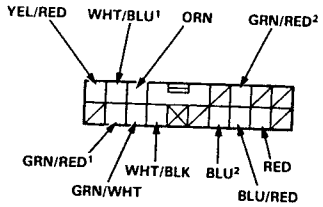

View from wire side

Seat Belt Reminder and Key-in Warning System:

No.	Terminal	Test condition	Test: Desired result	Possible cause if result is not obtained
1	B8	Under all conditons.	Check for continuity to ground: There should be continuity.	• Poor ground (G401, G402). • An open in the wire.
2	B2	Ignition switch ON.	Check for voltage to ground: There should be battery voltage.	• Blown No.1 (10 A) fuse (in the under-dash fuse/relay box). • Blown bulb. • An open in the wire.
3	B1	Driver's door opened.	Check for voltage to ground: There should be 1 V or less.	• Faulty driver's door switch. • An open in the wire
4	BLU²	Ignition key is inserted into the ignition switch.	Check for voltage to ground: There should be 1 V or less.	• Faulty ignition key switch. • An open in the wire. • Poor ground (G401, G402).
5	BLU/RED	Driver's seat belt is not buckled.	Check for voltage to ground: There should be battery voltage.	• Faulty seat belt switch. • Poor ground (G401, G402). • An open in the wire.

Power Window Key-off Timer System:

No.	Terminal	Test condition	Test: Desired result	Possible cause if result is not obtained
1	B8	Under all conditions.	Check for continuity to ground: There should be continuity.	• Poor ground (G401, G402).
2	B1	Ignition switch ON and the driver's door closed.	Check for voltage to ground: There should be battery voltage.	• Blown No.1 (10 A) fuse (in the under-dash fuse/relay box). • An open in the wire.
3	B12	Under all conditions.	Check for voltage to ground: There should be battery voltage.	• Blown No.37 (15 A) fuse (in the under-hood fuse/relay box). • An open in the wire
4	GRN/RED²	Front passenger's door opened.	Check for voltage to ground: There should be 1 V or less.	• Faulty door switch. • An open in the wire.
5	RED	Connect the B12 terminal to the RED terminal.	Check window operation: Power windows should operate as the switch is turned.	• Faulty power window relay. • Poor ground (G201). • An open in the wire.

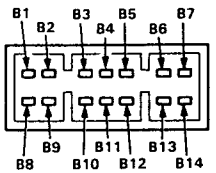

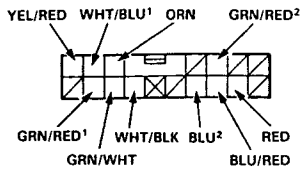

View from wire side

Entry Light Timer System

No.	Terminal	Test condition	Test: Desired result	Possible cause if result is not obtained
1	B8	Under all conditons.	Check for continuity to ground: There should be continuity.	• Poor ground (G401, G402). • An open in the wire.
2	B12	Under all conditions.	Check for voltage to ground: There should be battery voltage.	• Blown No.37 (15 A) fuse (in the under-hood fuse/relay box). • An open in the wire.
3	WHT/BLK	Under all conditions.	Attach to ground: Ignition key light should come on.	• Blown bulb. • An open in the wire
4	B1	Driver's door opened.	Check for voltage to ground: There should be 1 V or less.	• Faulty driver's door switch. • An open in the wire. • Poor ground (G401, G402).

Light-on Reminder System:

No.	Terminal	Test condition	Test: Desired result	Possible cause if result is not obtained
1	B8	Under all conditions.	Check for continuity to ground: There should be continuity.	• Poor ground (G401, G402). • An open in the wire.
2	B13	Cabination light switch ON.	Check for voltage to ground: There should be battery voltage.	• Blown No. 21 (20 A) fuse (in the under-hood fuse/relay box). • Faulty combination light switch (Without security system). • Faulty taillight relay (With security system). • An open in the wire.
3	B2	Ignition switch ON.	Check for voltage to ground: There should be battery voltage.	• Blown No.1 (10 A) fuse (in the under-dash fuse/relay box). • An open in the wire.
4	B1	Driver's door opened.	Check for voltage to ground: There should be 1 V or less.	• Faulty driver's door switch. • An open in the wire. • Poor ground (G401, G402)
5	ORN	Ignition switch ON and connect the B2 terminal to the ORN terminal.	Check chime operation: Chime should ring each time the battery is connected.	• Faulty chime. • An open in the wire.

(cont'd)

Input Test (cont'd)

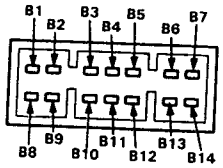

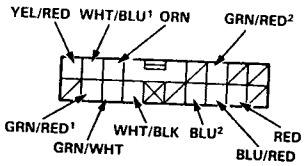

View from wire side

Rear Window Defogger Timer Circuit:

No.	Terminal	Test condition	Test: Desired result	Possible cause if result is not obtained
1	B8	Under all conditons.	Check for continuity to ground: There should be continuity.	• Poor ground (G401, G402). • An open in the wire.
2	B6	Defogger switch pushed.	Check for continuity to ground: There should be continuity as the switch is pushed.	• Faulty defogger switch. • Poor ground (G401, G402). • An open in the wire.
3	B5	Ignitioin switch ON.	Attach to ground: Rear window defogger should work and the defogger switch indicator light should come on.	• Blown No. 8 (7.5 A) fuse (in the under-dash fuse/relay box). • Faulty defogger relay. • Blown bulb. An open in the wire.
4	B2	Ignition switch ON.	Check for voltage to ground: There should be battery voltage.	• Blown No.1 (10 A) fuse (in the under-dash fuse/relay box). • An open in the wire.

Oil Pressure Indicator Flasher System:

No.	Terminal	Test condition	Test: Desired result	Possible cause if result is not obtained
1	B8	Under all conditions.	Check for continuity to ground: There should be continuity.	• Poor ground (G401, G402). • An open in the wire.
2	B12	Ignition switch ON.	Check for voltage to ground: There should be battery voltage.	• Blown No. 1 (10 A) fuse (in the under-dash fuse/relay box). • An open in the wire.
3	WHT/BLU¹	Engine running.	Check for voltage to ground: There should be 1 V or less	• Faulty charging system. • An open in the wire
4	YEL/RED	Ignition switch OFF.	Check for continuity to ground: There should be continuity.	• Faulty oil pressure switch. • An open in the wire.
		Ignition switch ON.	Check light operation. If the light does not come on, attach the YEL/RED terminal to ground: Light should come on as the ignition switch is turned ON.	• Blown bulb. • An open in the wire.
		Start the engine.	Check for voltage to ground: There should be battery voltage.	• Insufficient oil. • Improper lubrication. • Faulty oil pressure switch.

Key-in Reminder

Ignition Key Switch Test

NOTE: Refer to page 23-164 for a wiring description of the key-in beeper circuit diagram, and page 23-168 for the input test of the beeper circuit.

When the ignition key is not removed, the key-in beeper in the integrated control unit senses ground through the closed ignition key switch. When you open the driver's door, the beeper circuit senses ground through the closed door switch. With ground at the "BLU²" and "B1" terminals, the beeper sounds.

1. Remove the dashboard lower cover and knee bolster (see page 23-66).
2. Disconnect the 8-P connector from the main wire harness.

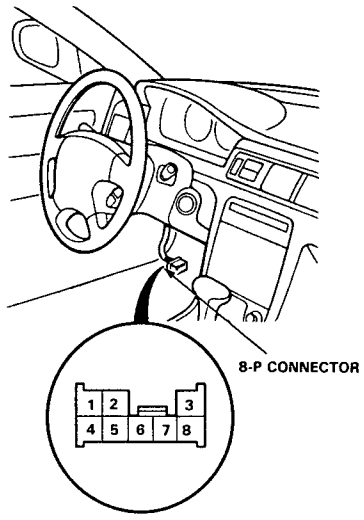

View from wire side.

3. There should be continuity between the No.7 and No.8 terminals when the ignition key is inserted in to the ignition key cylinder. There should be no continuity with the ignition key removed.

Lights-on Reminder

Chime Test

NOTE: Refer to page 23-165 for wiring description of the lights-on reminder circuit diagram, and page 23-169 for the input test of the circuit.

When the ignition key is turned to "0" position and removed, with the lights on, voltage is applied to the reminder circuit in the integrated control unit. When you open the driver's door, the circuit senses ground through the closed door switch. With voltage at the "B13" terminal, ground at the "B1" terminal and no voltage at the "B2" terminal, the chime is activated to remind the driver to turn off the lights.

1. Remove the dashboard lower cover and knee bolster (see page 23-66).
2. Disconnect the 2-P connector from the main wire harness (see page 23-66).

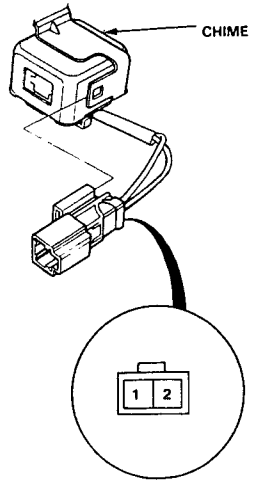

3. Test the chime operation by connecting battery power to No. 1 terminal, grounding No. 2 terminal, and cycling the power on-off repeatedly.
4. If the chime fails to sound every time power is cycled, replace it.