Cylinder Head/Valve Train

Special Tools 6-2
Illustrated Index 6-3
Valve Seals
  Replacement (Cylinder head removal not required) 6-5
Cylinder Head
  Removal 6-7
  Warpage 6-16
  Installation 6-24
Camshaft Pulley
  Removal 6-10
Rocker Arm Assembly
  Removal 6-10
Rocker Arms
  Overhaul 6-11
Camshaft
  Inspection 6-12
Rocker Arms and Shafts
  Clearance 6-14
Valves, Valve Springs and Valve Seals
  Removal 6-15
  Installation Sequence 6-21
  Valve Installation 6-22
Valve Guides
  Valve Movement 6-17
  Replacement 6-19
  Reaming 6-20
Valve Seats
  Reconditioning 6-18
Camshaft/Rocker Arms and Camshaft Seals
  Installation 6-22
Timing Belt
  Illustrated Index 6-26
  Inspection 6-27
  Tension Adjustment 6-27
Crankshaft Pulley Bolt
  Replacement 6-28
  Removal 6-29
  Installation 6-31
Valve Clearance
  Adjustment 6-33
TDC/CKP/CYP Sensors
  Replacement 6-35

Special Tools

Ref. No.	Tool Number	Description	Qty	Page Reference
①	07HAH–PJ7010A or 07HAH–PJ7010B	Valve Guide Reamer, 5.5 mm	1	6-20
②	07JAB–001020A	Holder Handle	1	6-28
③	07JAB–001040A	Holder Attachment, 50 mm	1	6-28
④	07742–0010100	Valve Guide Driver, 5.5 mm	1	6-19, 20
⑤	07757–PJ1010A	Valve Spring Compressor Attachment	1	6-15

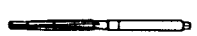

①

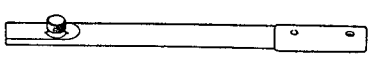

②

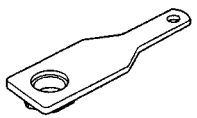

③

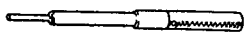

④

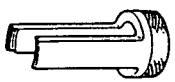

⑤

Illustrated Index

CAUTION: To avoid damaging the cylinder head, wait until the engine coolant temperature drops below 100°F (38°C) before removing it.

NOTE:
- Use new O-rings and gaskets when reassembling.
- Use liquid gasket, Part No. 08718–0001.
- Clean the oil control orifice when installing.
- Prior to reassembling, clean all the parts in solvent, dry them, and apply lubricant to any contact parts.

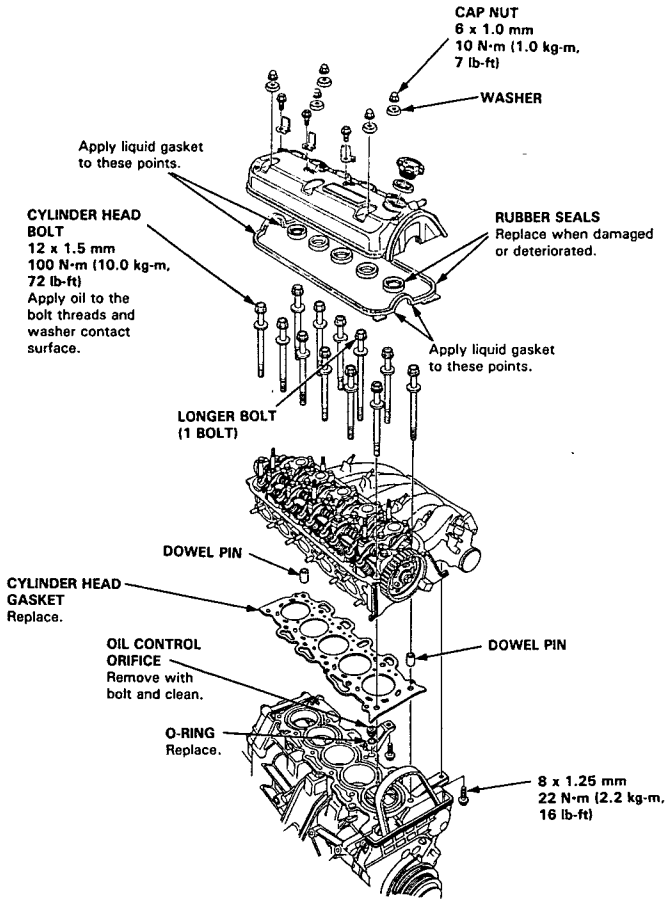

(cont'd)

Illustrated Index

(cont'd)

NOTE:
- Use new O-rings and gaskets when reassembling.
- Use liquid gasket, Part No. 08718–0001.
- Prior to reassembling, clean all the parts in solvent, dry them, and apply lubricant to any contact parts.

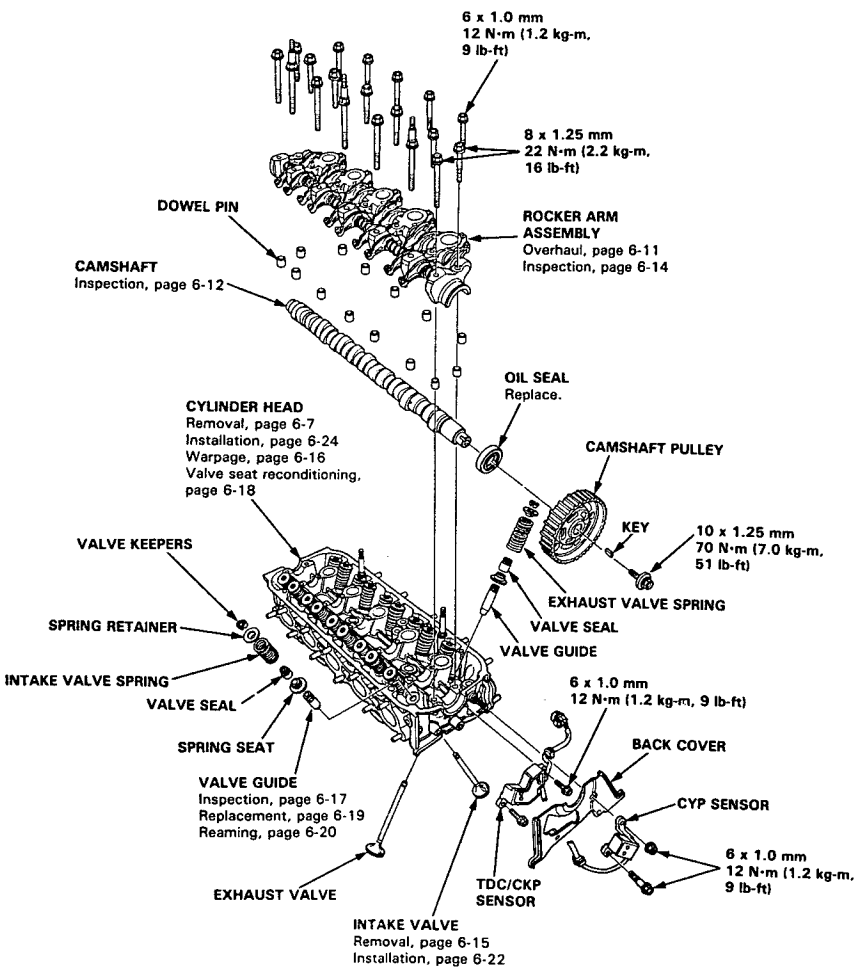

Valve Seals

Replacement (Cylinder head removal not required)

NOTE: Cylinder head removal is not required in this procedure.

The procedure shown below applies when using the in-car valve spring compressor. (Snap-on YA8845 with YA8845-2A 7/8 in attachment)

WARNING Always wear approved eye protection when using the in-car valve spring compressor.

1. Turn the crankshaft so that the No. 1 piston is at top dead center (TDC).

2. Remove the cylinder head cover and the rocker arm assembly (page 6-10).

   NOTE: When removing or installing the rocker arm assembly, do not remove the camshaft holder bolts. The bolts will keep the holders, springs and rocker arms on the shaft.

3. Remove the fuel injectors and the wire harness.

Intake Valve Seals:

4. Using the 8 mm bolts supplied with the tool, mount the two uprights to the cylinder head at the end camshaft holder locations. The uprights fit over the camshaft as shown.

5. Insert the cross shaft through the top holes of the uprights.

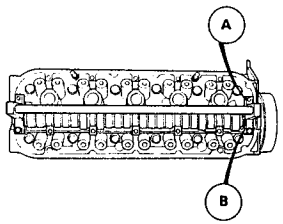

6. Select the 7/8 in diameter long compressor attachment and fasten the attachment to the No. 4 hole in the lever arm with the speed pin supplied.

7. Position the piston at TDC and insert an air adaptor into the spark plug hole. Pump air into the cylinder to keep the valve closed while compressing the springs and removing the valve keepers.

8. Position the lever arm under the cross shaft so the lever is perpendicular to the shaft and the compressor attachment rests on top of the retainer for the spring being compressed. Use the front position slot on the lever as shown.

   NOTE: Put shop towels over the oil passages to prevent the valve keepers from falling into the cylinder head.

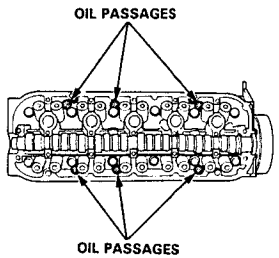

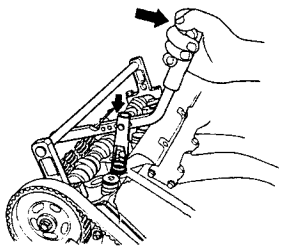

9. Using a downward motion on the lever arm, compress the valve spring and remove the keepers from the valve stem. Slowly release pressure on the spring.

(cont'd)

Valve Seals

Replacement (Cylinder head removal not required) (cont'd)

10. Remove the valve seals (page 6-15).

11. Install the new valve seals (page 6-21).

12. Install the springs, the retainers and the keepers in reverse order of removal.

13. Repeat steps 7 to 12 on the other cylinders.

Exhaust Valve Seals:

14. Using the 8 mm bolts supplied with the tool, mount the two uprights to the cylinder head at the end camshaft holder locations. The uprights fit over the camshaft as shown.

15. Insert the cross shaft through the top holes of the uprights.

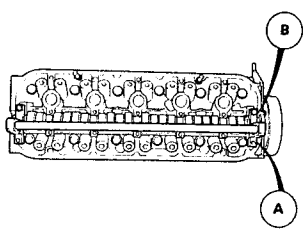

16. Select the 7/8 in diameter long compressor attachment and fasten the attachment to the front hole in the lever arm with the speed pin supplied.

17. Position the piston at TDC and insert an air adaptor onto the spark plug hole. Pump air into the cylinder to keep the valve closed while compressing the springs and removing the valve keepers.

18. Position the lever arm under the cross shaft so the lever is perpendicular to the shaft and the compressor attachemnt rests on top of the retainer for the spring being compressed. Use the rear position slot on the lever as shown.

NOTE: Put shop towels over the oil passages to prevent the valve keepers from falling into the cylinder head.

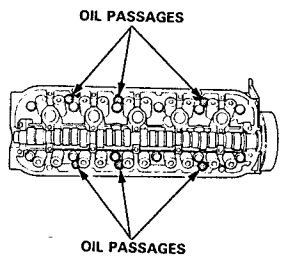

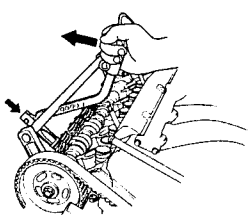

19. Using an upward motion on the lever arm, compress the valve spring and remove the keepers from the valve stem. Slowly release pressure on the spring.

20. Remove the valve seals (page 6-15).

21. Install the new valve seals (page 6-21).

22. Install the springs, the retainers and the keepers in reverse order of removal.

23. Repeat steps 17 to 21 on the other cylinders.

Cylinder Head

Removal

Engine removal is not required for this procedure.

CAUTION: To avoid damaging the cylinder head, wait until the coolant temperature drops below 100°F (38°C) before loosening the retaining bolts.

NOTE:
- Inspect the timing belt before removing the cylinder head.
- Turn the crankshaft so that the No. 1 piston is at top dead center (page 6-31).
- Mark all emission hoses before disconnecting them.
- Anti-theft radios have a coded theft protection circuit. Be sure to get the customer's code number before
  - Disconnecting the battery.
  - Removing the No. 39 (10 A) fuse in the underhood fuse/relay box.
  - Removing the radio.

  After service, reconnect power to the radio and turn it on.
  When the word "CODE" is displayed, enter the customer's 5-digit code to restore radio operation.

1. Disconnect the negative terminal from the battery.

2. Drain the engine coolant (page 10-5).
   - Remove the radiator cap to speed draining.

3. Relieve the fuel pressure.

   WARNING Do not smoke while working on fuel system, keep open flame or spark away from work area. Drain fuel only into an approved container.

4. Remove the intake air duct.

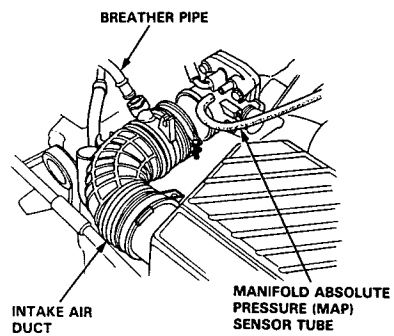

5. Disconnect the fuel feed hose (page 5-3) and fuel return hose (page 5-4).

6. Disconnect the throttle cable at the throttle body (page 5-3).

   NOTE:
   - Take care not to bend the cable when removing it. Always replace any kinked cable with a new one.
   - Adjust the throttle cable when installing (see section 11).

7. Remove the engine ground wire and the evaporative emission (EVAP) control canister hoses from intake manifold (page 5-4).

8. Remove the heater hoses and brake booster vacuum hose (page 5-4).

9. Remove the ignition coil wire, condenser wire and engine ground cable (page 5-2).

10. Remove the ABS motor relay box and the battery heat shield (page 5-2).

11. Disconnect the ignition wires, then remove the distributor (page 5-4).

12. Remove the engine wire harness connectors and wire harness clamps from the cylinder head and intake manifold.
    - TDC/CYP/CKP sensor connector
    - Engine coolant temperature (ECT) switch connector
    - Five fuel injector connector
    - Exhaust gas recirculation (EGR) valve lift sensor connector
    - Bypass solenoid valve connector
    - EVAP purge cut solenoid valve connector
    - Idle air control (IAC) valve connector
    - Throttle position (TP) sensor connector
    - Intake air temperature (IAT) sensor connector
    - ECT sensor connector
    - ECT gauge sending unit connector

(cont'd)

Cylinder Head

Removal (cont'd)

13. Remove the emission vacuum hoses and water bypass hoses from the intake manifold assembly.

14. Remove the upper radiator hose and water bypass hose from the thermostat case.

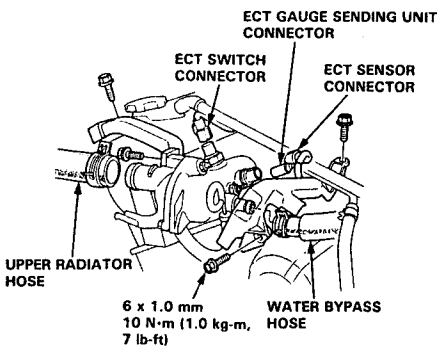

15. Remove the intake manifold bracket bolts.

16. Remove the heated oxygen sensor (HO2S).

17. Remove the exhaust manifold bracket.

18. Remove the exhaust pipe A.

19. Remove the exhaust manifold covers.

20. Remove the exhaust manifold.

21. Remove the insulator plate.

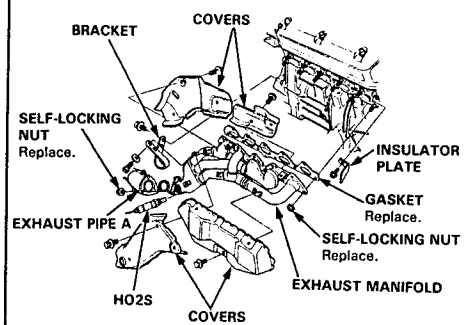

22. Remove the positive crankcase ventilation (PCV) hose, then remove the cylinder head cover.

23. Remove the upper cover.

24. Loosen the timing belt adjusting bolt 180°.

25. Push the tensioner to release tension from the belt, then retighten the adjusting bolt.

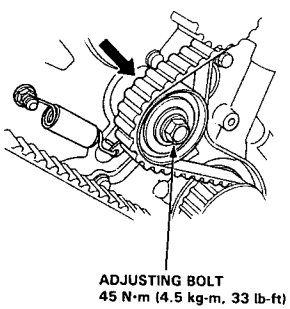

26. Remove the timing belt from the camshaft pulley.

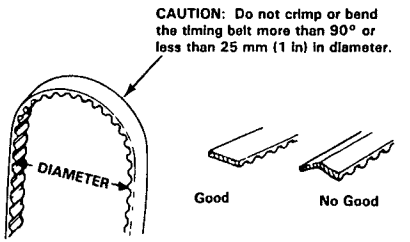

27. Remove the cylinder head bolts, then remove the cylinder head.

CAUTION: To prevent warpage, unscrew the bolts in sequence 1/3 turn at a time; repeat until all bolts are loosened.

CYLINDER HEAD BOLT LOOSENING SEQUENCE:

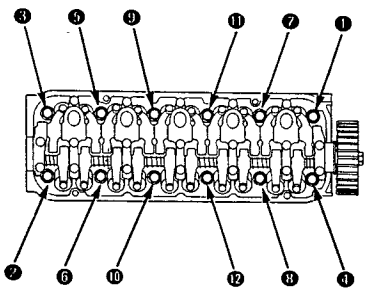

NOTE: Separate the cylinder head from the engine block with a flat blade screwdriver as shown.

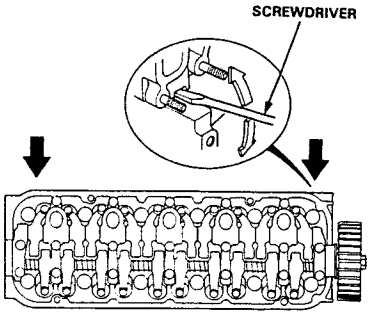

28. Disconnect the heater pipe from the connecting pipe.

29. Remove the intake manifold from the cylinder head.

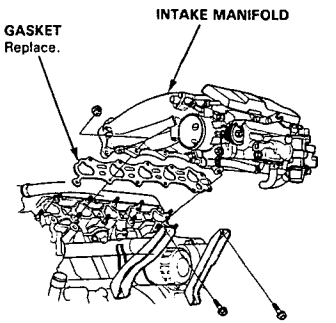

Camshaft Pulley

Removal

1. To ease reassembly, turn the camshaft pulley until the "UP" mark faces up, and the front timing marks are aligned with the cylinder head upper surface.

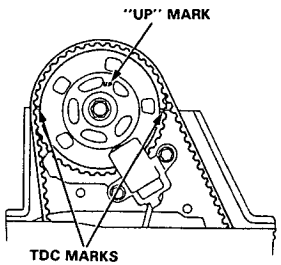

2. Remove the CYP sensor.
3. Remove the retaining bolt, the camshaft pulley and the key, then remove the back cover.
4. Remove the TDC/CKP sensor.

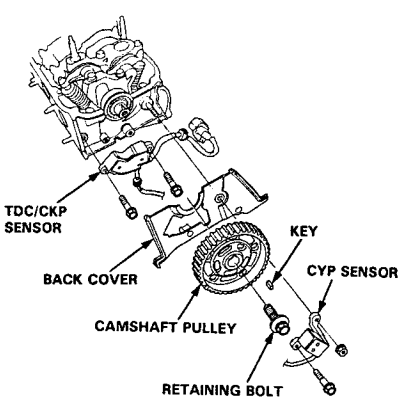

Rocker Arm Assembly

Removal

1. Loosen the adjusting screws, then remove the bolts and the rocker arm assembly.

NOTE:
- Unscrew the camshaft holder bolts two turns at a time, in a crisscross pattern, to prevent damaging the valves or rocker arm assembly.
- When removing the rocker arm assembly, do not remove the camshaft holder bolts. The bolts will keep the camshaft holders, the springs and the rocker arms on the shafts.

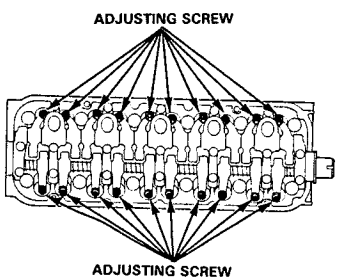

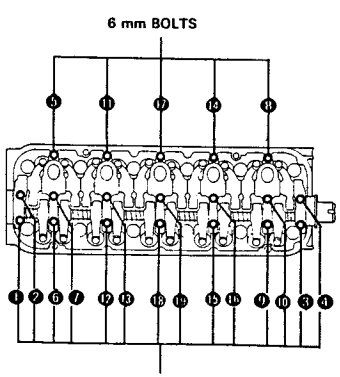

Rocker Arms

Overhaul

NOTE:
- Identify parts as they are removed to ensure reinstallation in original locations.
- Inspect rocker shafts and rocker arms (page 6-14).
- Rocker arms must be installed in the same position if reused.
- When removing or installing the rocker arm assembly, do not remove the camshaft holder bolts. The bolts will keep the holders, springs and rocker arms on the shaft.
- When reassembling, fit the projection of the intake rocker shaft to the notch in the camshaft holder.

Prior to reassembling, clean all the parts in solvent, dry them and apply lubricant to any contact parts.

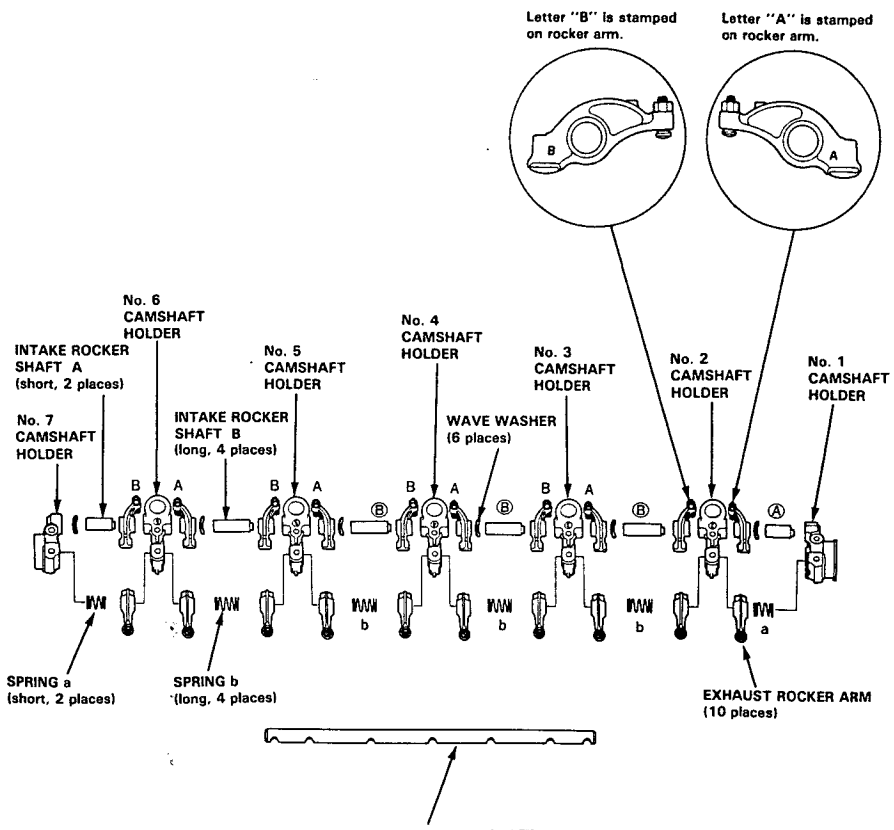

Camshaft

Inspection

NOTE:
- Do not rotate the camshaft during inspection.
- Remove the rocker arms and rocker shafts.

1. Put the camshaft and the camshaft holders on the cylinder head, then tighten the bolts to the specified torque.

   Specified torque:
   8 mm bolts: 22 N·m (2.2 kg-m, 16 lb-ft)
   6 mm bolts: 12 N·m (1.2 kg-m, 9 lb-ft)

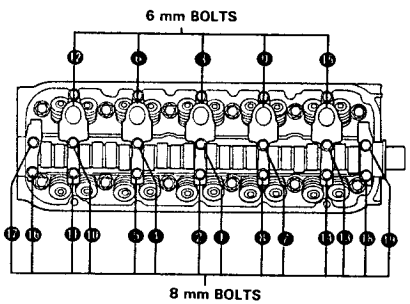

2. Seat the camshaft by pushing it toward the rear of the cylinder head.

3. Zero the dial indicator against the end of the camshaft. Push the camshaft back and forth and read the end play.

   Camshaft End Play:
   Standard (New): 0.05–0.15 mm (0.002–0.006 in)
   Service Limit: 0.5 mm (0.02 in)

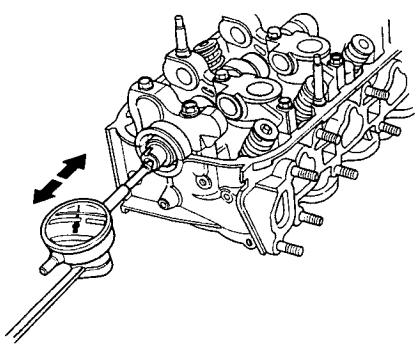

4. Remove the bolts, then remove the camshaft holders from the cylinder head.
   - Lift camshaft out of cylinder head, wipe clean, then inspect lift ramps. Replace camshaft if lobes are pitted, scored, or excessively worn.
   - Clean the camshaft bearing surfaces in the cylinder head, then set camshaft back in place.
   - Insert plastigage strip across each journal.

5. Install the camshaft holders and tighten the bolts to the specified torque.

6. Remove the camshaft holders, then measure the widest portion of the plastigage on each journal.

   Camshaft-to-Holder Oil Clearance:
   Standard (New): 0.050–0.089 mm (0.0020–0.0035 in)
   Service Limit: 0.15 mm (0.006 in)

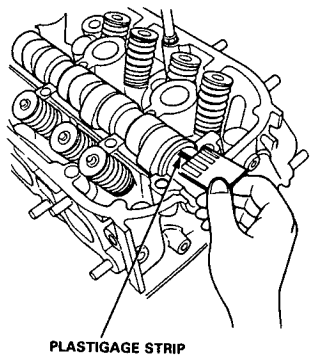

7. If the camshaft-to-holder oil clearance is out of tolerance:
   - And the camshaft has already been replaced, you must replace the cylinder head.
   - If the camshaft has not been replaced, first check the total runout with the camshaft supported on V-blocks.

   Camshaft Total Runout:
   Standard (New): 0.03 mm (0.001 in) max.
   Service Limit: 0.04 mm (0.002 in)

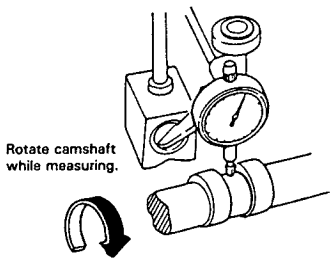

   - If the total runout of the camshaft is within tolerance, replace the cylinder head.
   - If the total runout is out of tolerance, replace the camshaft and recheck. If the oil clearance is still out of tolerance, replace the cylinder head.

8. Check the cam lobe height wear.

   Cam Lobe Height Standard (New):
   INTAKE: 39.203 mm (1.5434 in)
   EXHAUST: 38.875 mm (1.5305 in)

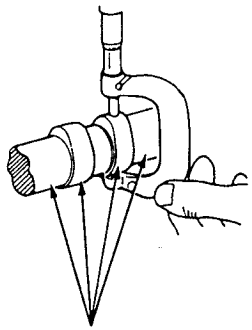

Rocker Arms and Shafts

Clearance

Measure the intake rocker shafts and exhaust rocker shaft.

1. Measure the diameter of the shaft at the first rocker location.

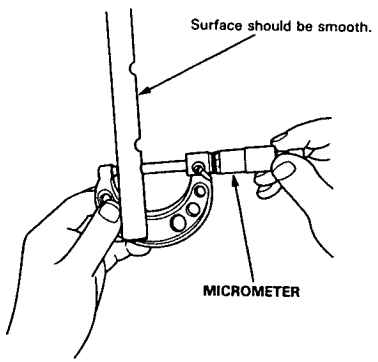

2. Zero the gauge to the shaft diameter.

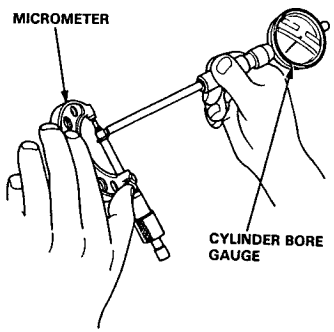

3. Measure inside diameter of rocker arm and check for out-of-round condition.

Rocker Arm-to-shaft clearance:
Service Limit: 0.08 mm (0.003 in)

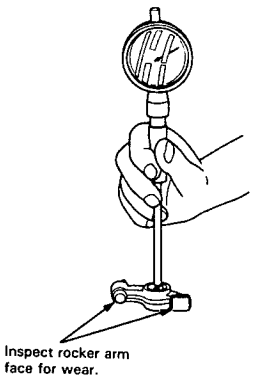

4. Repeat for all the rockers.
   - If the clearance is over the service limit, replace the rocker shaft and all overtolerance rocker arms.

Valves, Valve Springs and Valve Seals

Removal

NOTE: Identify valves and valve springs as they are removed so that each item can be reinstalled in its original position.

1. Using an appropriate-sized socket and plastic mallet, lightly tap the valve retainer to loosen the valve keepers before installing the valve spring compressor.

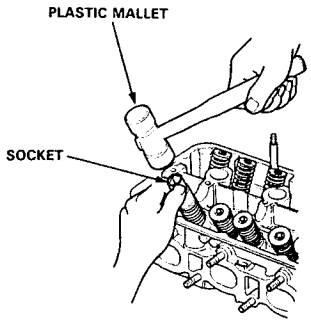

2. Install the valve spring compressor. Compress the spring and remove the valve keeper.

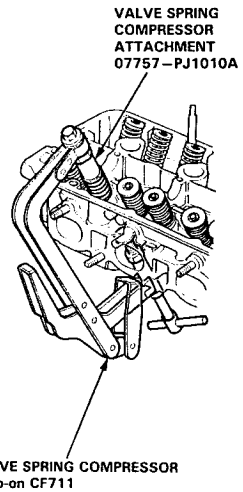

3. Install the special tool as shown.

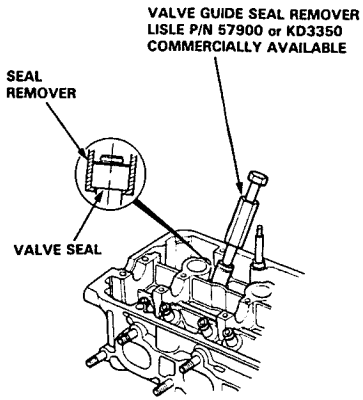

4. Remove the valve seal.

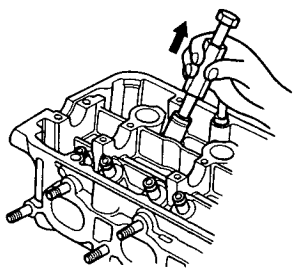

(cont'd)

Valves, Valve Springs and Valve Seals

Removal (cont'd)

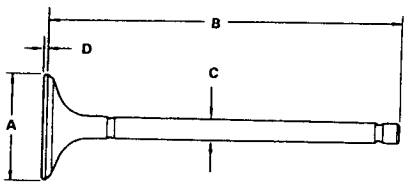

Intake Valve Dimensions
A Standard (New): 33.9–34.1 mm (1.33–1.34 in)
B Standard (New): 110.88–111.18 mm (4.365–4.377 in)
C Standard (New): 5.475–5.485 mm (0.2156–0.2159 in)
C Service Limit: 5.445 mm (0.2144 in)
D Standard (New): 0.85–1.15 mm (0.033–0.045 in)
D Service Limit: 0.65 mm (0.026 in)

Exhaust Valve Dimensions
A Standard (New): 28.9–29.1 mm (1.14–1.15 in)
B Standard (New): 123.15–123.45 mm (4.848–4.860 in)
C Standard (New): 5.450–5.460 mm (0.2146–0.2150 in)
C Service Limit: 5.420 mm (0.2134 in)
D Standard (New): 1.55–1.85 mm (0.061–0.073 in)
D Service Limit: 1.35 mm (0.053 in)

Cylinder Head

Warpage

NOTE: If the camshaft-to-holder oil clearances (page 6-12) are not within specification, the head cannot be resurfaced.

If the camshaft-to-holder oil clearances are within specifications, check the head for warpage.

- If warpage is less than 0.05 mm (0.002 in) cylinder head resurfacing is not required.
- If warpage is between 0.05 mm (0.002 in) and 0.2 mm (0.01 in), resurface cylinder head.
- Maximum resurface limit is 0.2 mm (0.01 in) based on a height of 100 mm (3.9 in).

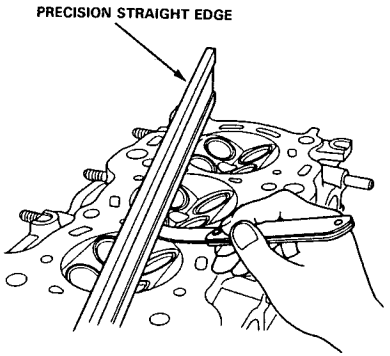

Measure along edges, and 3 ways across center.

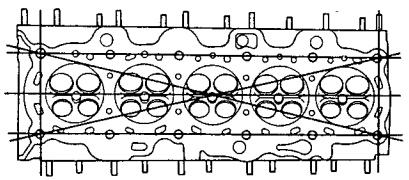

Cylinder Head Height:
Standard (New): 99.95–100.05 mm (3.935–3.939 in)

Valve Guides

Valve Movement

Measure the guide-to-stem clearance with a dial indicator while rocking the stem in the direction of normal thrust (wobble method).

Intake Valve Stem-to-Guide Clearance:
Standard (New): 0.04–0.09 mm (0.002–0.004 in)
Service Limit: 0.15 mm (0.006 in)

Exhaust Valve Stem-to-Guide Clearance:
Standard (New): 0.10–0.16 mm (0.004–0.006 in)
Service Limit: 0.22 mm (0.009 in)

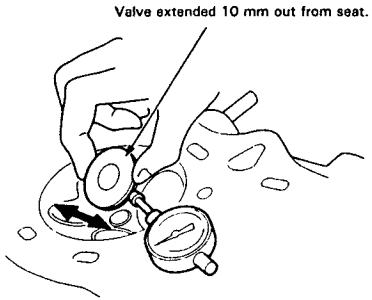

- If measurement exceeds the service limit, recheck using a new valve.
- If measurement is now within the service limit, reassemble using a new valve.
- If measurement still exceeds limit, recheck using alternate method below, then replace valve and guide, if necessary.

NOTE: An alternate method of checking guide to stem clearance is to subtract the O.D. of the valve stem, measured with a micrometer, from the I.D. of the valve guide, measured with an inside micrometer or ball gauge. Take the measurements in three places along the valve stem and three places inside the valve guide. The difference between the largest guide measurement and the smallest stem measurement should not exceed the service limit.

Intake Valve Stem-to-Guide Clearance:
Standard (New): 0.020–0.045 mm (0.0008–0.0018 in)
Service Limit: 0.075 mm (0.0030 in)

Exhaust Valve Stem-to-Guide Clearance:
Standard (New): 0.05–0.08 mm (0.002–0.003 in)
Service Limit: 0.12 mm (0.005 in)

Valve Seats

Reconditioning

1. Renew the valve seats in the cylinder head using a valve seat cutter.

   NOTE: If the guides are worn (page 6-17), replace them (page 6-19) before cutting the valve seats.

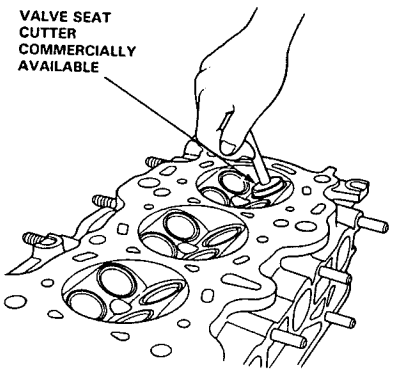

2. Carefully cut a 45° seat, removing only enough material to ensure a smooth and concentric seat.

3. Bevel the upper edge of the seat with the 30° cutter and the lower edge of the seat with the 60° cutter. Check the width of seat and adjust accordingly.

4. Make one more very light pass with the 45° cutter to remove any possible burrs caused by the other cutters.

   Valve Seat Width:

Standard (New):	Intake	1.25–1.55 mm (0.049–0.061 in)
	Exhaust	1.25–1.55 mm (0.049–0.061 in)
Service Limit:	Intake	2.0 mm (0.08 in)
	Exhaust	2.0 mm (0.08 in)

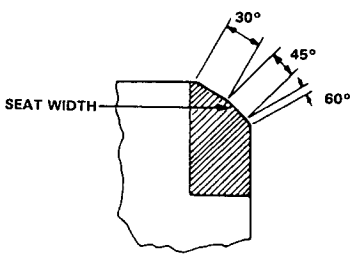

5. After resurfacing the seat, inspect for even valve seating: Apply Prussian Blue compound to the valve face, and insert the valve in its original location in the head, then lift and snap it closed against the seat several times.

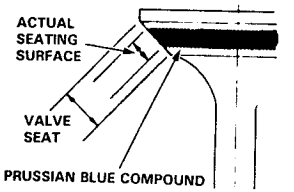

6. The actual valve seating surface, as shown by the blue compound, should be centered on the seat.
   - If it is too high (closer to the valve stem), you must make a second cut with the 60° cutter to move it down, then one more cut with the 45° cutter to restore seat width.
   - If it is too low (closer to the valve edge), you must make a second cut with the 30° cutter to move it up, then one more cut with the 45° cutter to restore seat width.

   NOTE: The final cut should always be made with the 45° cutter.

7. Insert the intake and exhaust valves in the head and measure the valve stem installed height.

   Valve Stem Installed Height:

Standard (New):	Intake	48.745–49.215 mm (1.9191–1.9376 in)
	Exhaust	51.315–51.785 mm (2.0203–2.0388 in)
Service Limit:	Intake	49.465 mm (1.9474 in)
	Exhaust	52.035 mm (2.0486 in)

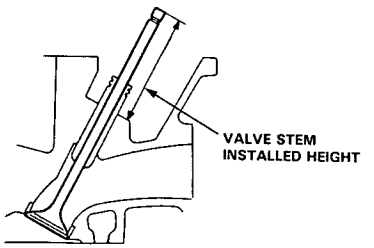

8. If the valve stem installed height is over the service limit, replace the valve and recheck. If its still over the service limit, replace the cylinder head; the valve seat in the head is too deep.

Valve Guides

Replacement

1. As illustrated in the removal steps of this procedure use a commercially-available air-impact driver attachment be modified to fit the diameter of the valve guides. In most cases, the same procedure can be done using Valve Guide Drivers and a conventional hammer.

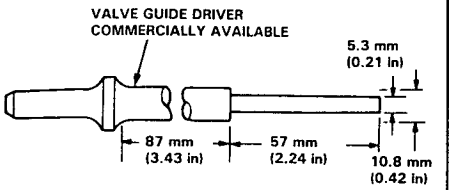

   Removal and Installation
   VALVE GUIDE DRIVER, 5.5 mm
   07742–0010100

2. Select the proper replacement guides and chill them in the freezer section of a refrigerator for about an hour.

3. Use a hot plate or oven to evenly heat the cylinder head to 300°F (150°C). Monitor the temperature with a cooking thermometer.

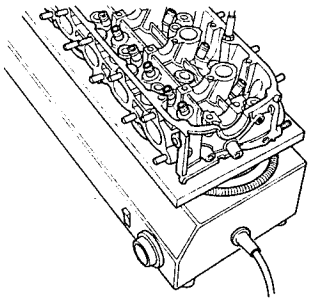

   CAUTION:
   - **Do not use a torch; it may warp the head.**
   - **Do not get the head hotter than 300°F (150°C); excessive heat may loosen the valve seats.**
   - **To avoid burns, use heavy gloves when handling the heated cylinder head.**

4. Working from the camshaft side, use the driver and an air hammer to drive the guide about 2 mm towards the combustion chamber. This will knock off some of the carbon and make removal easier.

   CAUTION:
   - **Always wear safety goggles or a face shield when using the air hammer.**
   - **Hold the air hammer directly in line with the valve guide to prevent damaging the driver.**

5. Turn the head over and drive the guide out toward the camshaft side of head.

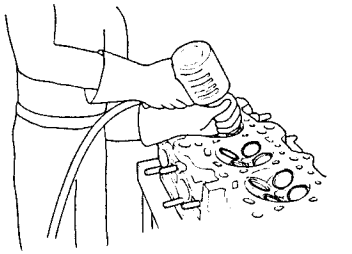

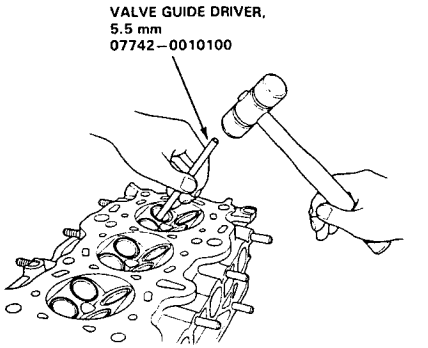

   If a valve guide still won't move, drill it out with a 8 mm (5/16 in) bit, they try again.

   CAUTION: Drill guides only in extreme cases; you could damage the cylinder head if the guide breaks.

6. Remove the new guides from the refrigerator, one at a time, as you need them.

(cont'd)

Valve Guides

Replacement (cont'd)

7. Slip a 6 mm (0.2 in) steel washer and the correct driver attachment over the end of the driver. (The washer will absorb some of the impact and extend the life of the driver).

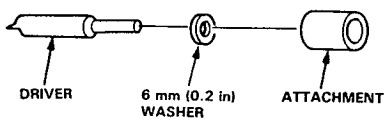

8. Install the new guide(s) from the camshaft side of the head; drive each one in until the attachment bottoms on the head. If you have all twenty guides to do, you may have to reheat the head one or two more times.

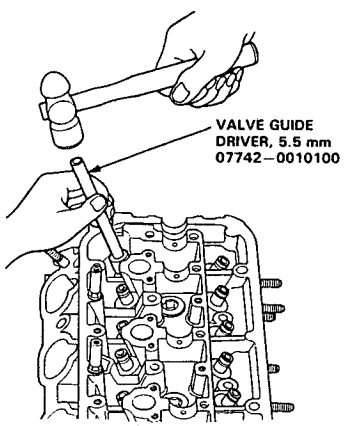

Valve Guide Installed Height:
Intake: 24.75–25.25 mm (0.974–0.994 in)
Exhaust: 16.05–16.55 mm (0.632–0.652 in)

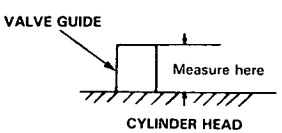

Reaming

NOTE: For new valve guides only.

1. Coat both the reamer and valve guide with cutting oil.
2. Rotate the reamer clockwise the full length of the valve guide bore.
3. Continue to rotate the reamer clockwise while removing it from the bore.
4. Thoroughly wash the guide in detergent and water to remove any cutting residue.
5. Check the clearance with a valve (page 6-17).
   – Verify that the valve slides in the valve guide without exerting pressure.

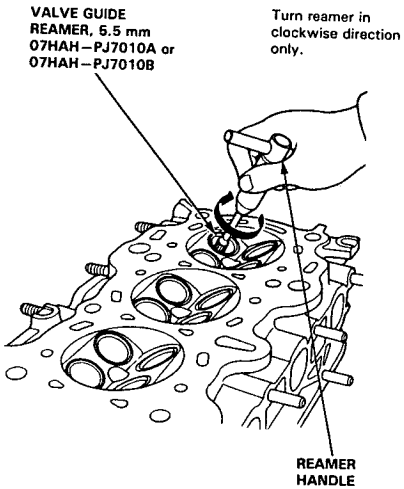

Valves, Valve Springs and Valve Seals

Valve Spring and Valve Seal Installation Sequence

NOTE: Exhaust and intake valve seals are NOT interchangeable.

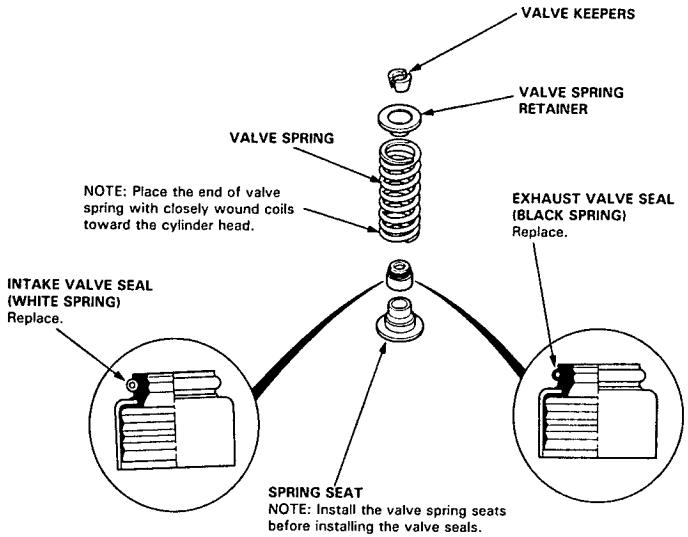

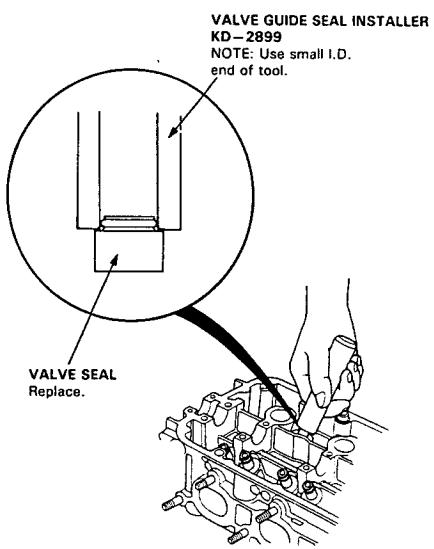

Valves, Valve Springs and Valve Seals

Valve Installation

- When installing the valves in the cylinder head, coat the valve stems with oil before inserting them into valve guides, and make sure the valves move up and down smoothly.
- When the valves and springs are in place, lightly tap the end of each valve stem two or three times to ensure proper seating of the valve and valve keepers.

NOTE: Tap the valve stem only along its axis so you do not bend the stem.

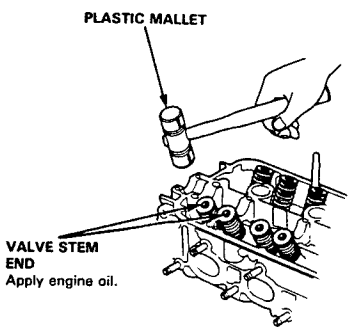

Camshaft/Rocker Arms and Camshaft Seals

Installation

CAUTION:
- **Make sure that all the rockers are in alignment with the valves when torquing the rocker assembly bolts.**
- **To prevent the rocker arm assembly from coming apart, leave the camshaft holder mounting bolts in the holes.**

1. After wiping down the cam and journals in the cylinder head, lubricate both surfaces and install the camshaft.
2. Set the camshaft and camshaft oil seal as shown below.
3. Install the camshaft seal with the open side (spring) facing in.

Lubricate the cam lobes after reassembly.

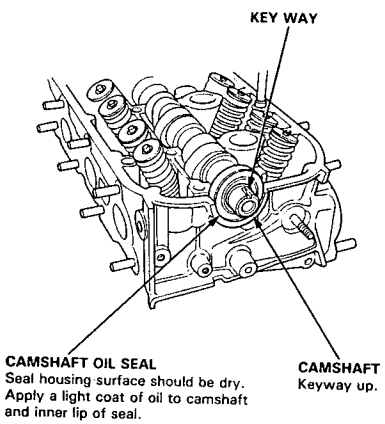

4. Apply liquid gasket to the head mating surfaces of the No. 1 and the No. 7 camshaft holders.
   – Apply liquid gasket to the shaded areas.

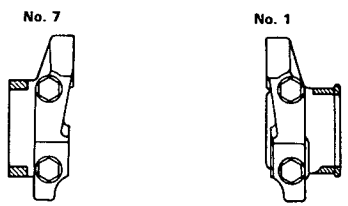

5. Set the rocker arm assembly in place and loosely install the bolts.
   – Make sure that the rocker arms are properly positioned on the valve stems.

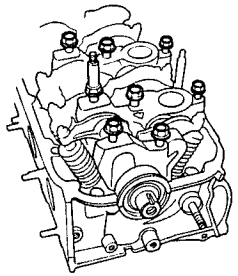

6. Tighten each bolt two turns at a time in the sequence shown below to ensure that the rockers do not bind on the valves.

Specified torque:
8 mm bolts: 22 N·m (2.2 kg-m, 16 lb-ft)
6 mm bolts: 12 N·m (1.2 kg-m, 9 lb-ft)

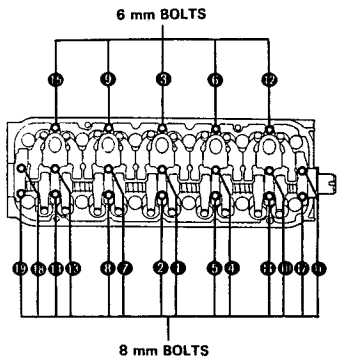

7. Install the TDC/CKP sensor and the back cover.

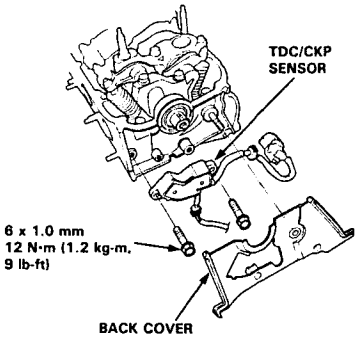

8. Install the camshaft pulley and the CYP sensor.

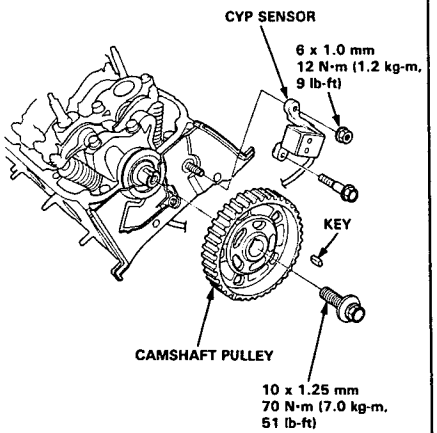

Cylinder Head

Installation

Install the cylinder head in the reverse order of removal:

NOTE:
- Always use a new cylinder head gasket.
- Cylinder head and engine block surface must be clean.
- Turn the crankshaft so that No. 1 piston is at TDC (page 6-31).
- Clean the oil control orifice when installing.

1. Install the oil control orifice, the cylinder head gasket and the dowel pins to the engine block.

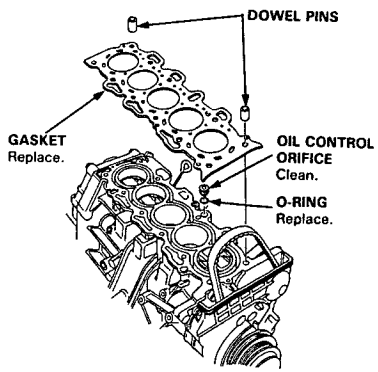

2. Install the intake manifold on the cylinder head, then tighten the nuts in a crisscross pattern in two or three steps, beginning with the inner nut.
   - Always use a new intake manifold gasket.

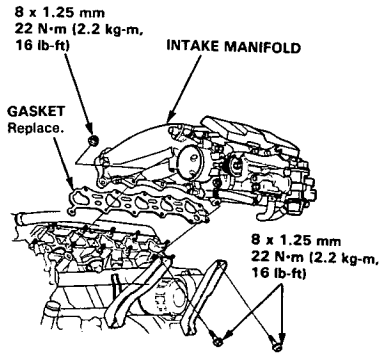

3. Install the cylinder head on the engine block. The cylinder head dowel pins and the head oil control orifice must be aligned.
   - Turn the camshaft pulley to TDC before installing.

4. Tighten the cylinder head bolts sequentially in two or three steps.
   - Apply clean engine oil to the bolt threads and washer contact surfaces.

Specified Torque:
12 x 1.5 mm
100 N·m (10.0 kg-m, 72 lb-ft)

NOTE: We recommend using a beam-type torque wrench. When using a preset-type torque wrench, be sure to tighten slowly and not to over-tighten.

CYLINDER HEAD BOLTS TORQUE SEQUENCE

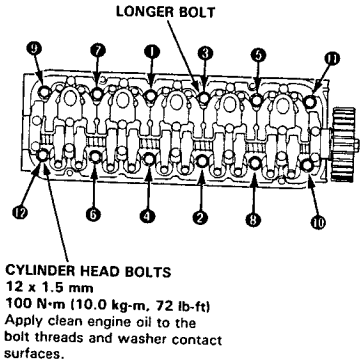

5. Tighten the intake manifold bracket bolts.

8. Loosely install the bracket to the exhaust manifold.

9. Install the exhaust manifold on the cylinder head, then tighten the self-locking nuts in a crisscross pattern in two or three steps, beginning with the inner nut.
   - Apply oil to the self-locking nut threads.
   - Always use new exhaust manifold gaskets.

10. Tighten exhaust manifold bracket bolts.

11. Install the exhaust manifold covers.

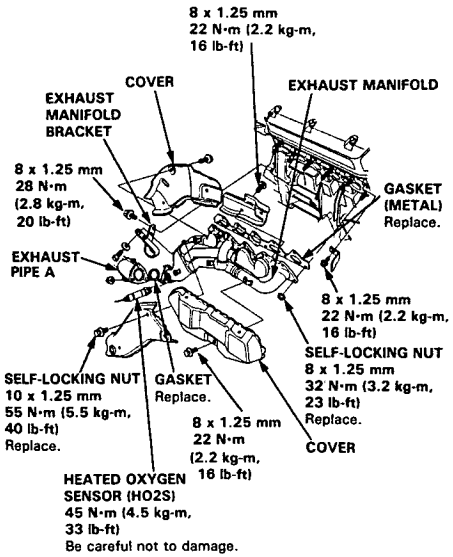

12. Install exhaust pipe A.

13. Install the HO2S.

14. Apply liquid gasket to the head mating surface of the No. 1 and No. 7 camshaft holder, then install the cylinder head cover.
   – Apply liquid gasket to the shaded areas.

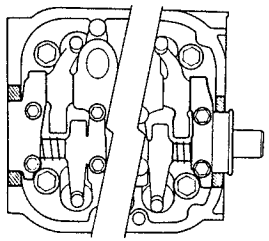

Timing Belt

Illustrated Index

NOTE:
- Turn the crankshaft so that the No. 1 piston is at TDC (page 6-31).
- Replace the rubber seals if they are damaged or have deteriorated.

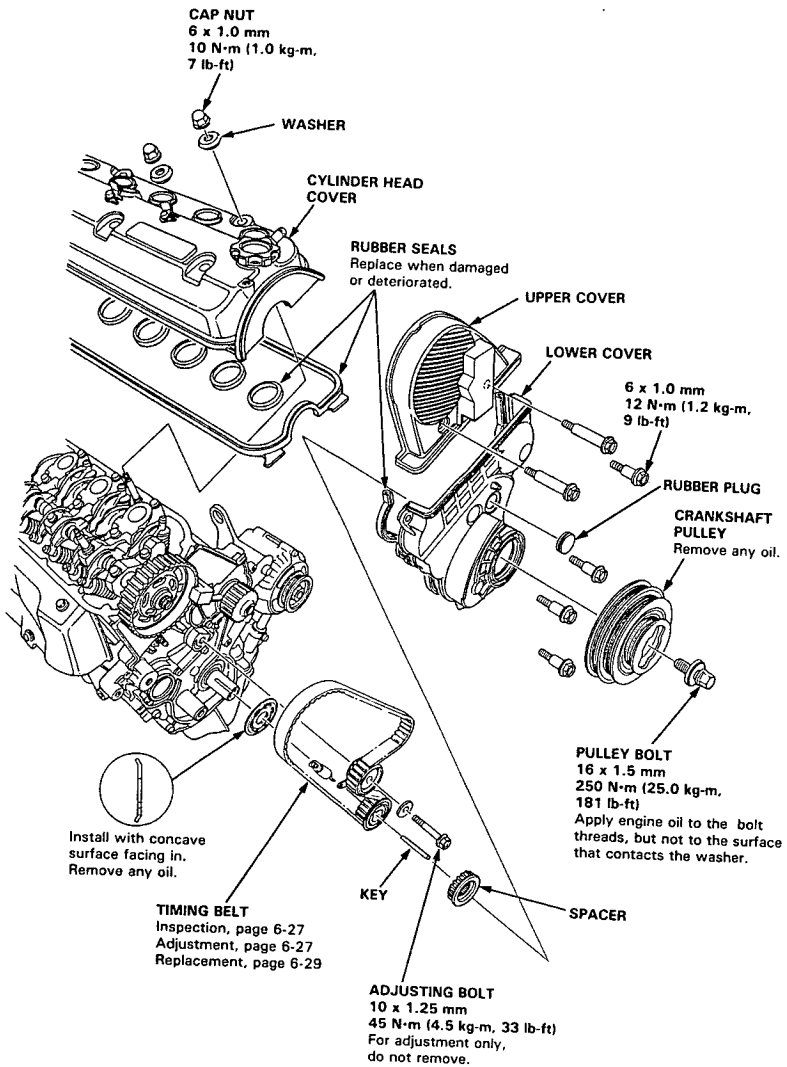

Timing Belt

Inspection

1. Disconnect the alternator terminal and the connector, then remove the engine wire harness from the cylinder head cover.
2. Remove the cylinder head cover.
3. Remove the upper cover.
4. Inspect the timing belt for cracks and oil or coolant soaking.

   NOTE:
   - Replace the belt if oil or coolant soaked.
   - Remove any oil or solvent that gets on the belt.

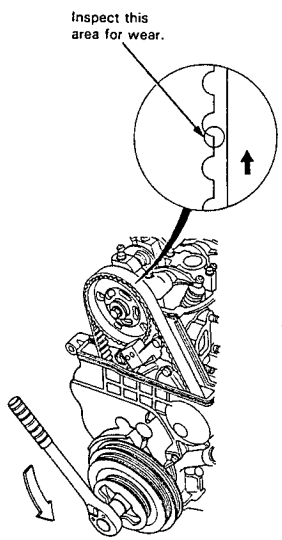

5. After inspecting, retorque the crankshaft pulley bolt to 250 N·m (25.0 kg-m, 181 lb-ft).

Tension Adjustment

CAUTION: Always adjust the timing belt tension with the engine cold.

NOTE:
- The adjuster is spring-loaded to properly tension to the belt after making the following adjustment.
- Always rotate the crankshaft counterclockwise when viewed from the pulley side. Rotating it clockwise may result in improper adjustment of the belt tension.

1. Disconnect the alternator terminal and the connector, then remove the engine wire harness from the cylinder head cover.
2. Remove the cylinder head cover.
3. Set the No. 1 piston at TDC (page 6-31).
4. Loosen the adjusting bolt 180°.

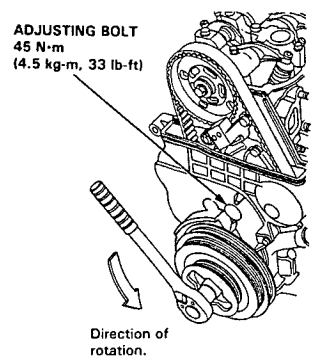

5. Rotate the crankshaft counterclockwise 3-teeth on the camshaft pulley to create tension on the timing belt.
6. Make sure the timing belt and the camshaft pulley are engaged securely.
7. Torque the adjusting bolt to 45 N·m (4.5 kg-m, 33 lb-ft).
8. After adjusting, retorque the crankshaft pulley bolt to 250 N·m (25.0 kg-m, 181 lb-ft).

Crankshaft Pulley Bolt

Replacement

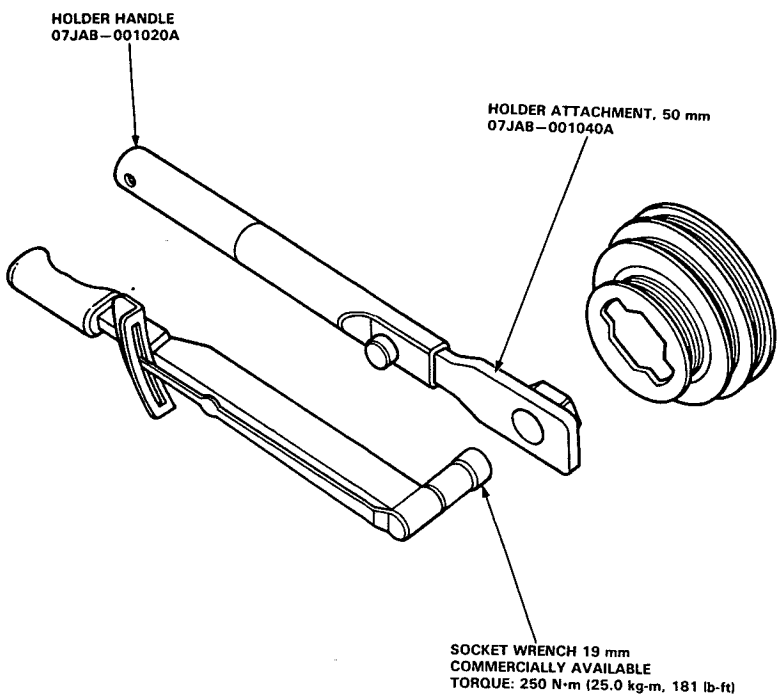

Timing Belt

Removal

CAUTION: Inspect the water pump when replacing the timing belt (page 10-9).

NOTE:
- Turn the crankshaft so that the No. 1 piston is at top dead center (page 6-31).
- Before removing the timing belt, mark its direction of rotation if it is to be reused.
- Anti-theft radios have a coded theft protection circuit. Be sure to get the customer's code number before
  - Disconnecting the battery.
  - Removing the No. 39 (10 A) fuse in the underhood fuse/relay box.
  - Removing the radio.

  After service, reconnect power to the radio and turn it on.

  When the word "CODE" is displayed, enter the customer's 5-digit code to restore radio operation.

1. Disconnect the negative terminal from the battery.
2. Remove the engine wire harness.
3. Loosen the mounting bolt/nut and adjusting bolt, then remove the power steering (P/S) pump belt.

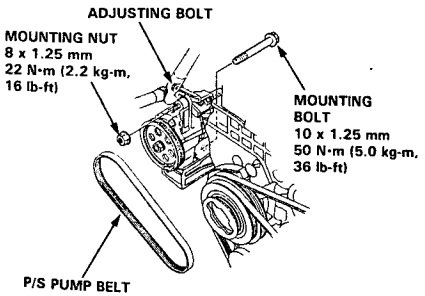

4. Loosen the idler pulley center nut and adjusting bolt, then remove the air conditioning (A/C) compressor belt.

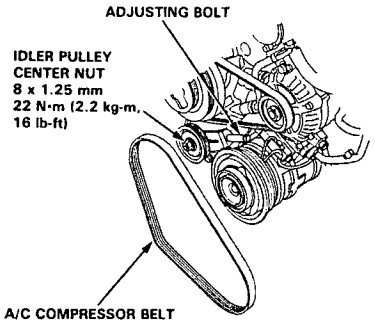

5. Loosen the mounting bolts and adjusting nut, then remove the alternator belt.

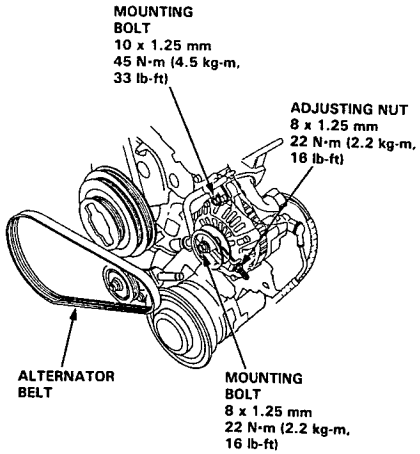

(cont'd)

Timing Belt

Removal (cont'd)

6. Remove the cylinder head cover.
7. Remove the upper cover.
8. Remove the crankshaft pulley.
9. Remove the lower cover.
10. Loosen the timing belt adjusting bolt 180°.
11. Push the tensioner to release tension from the belt, then retighten the adjusting bolt.
12. Remove the timing belt from the pulleys.

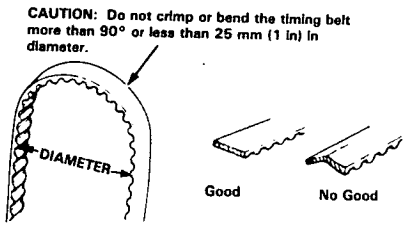

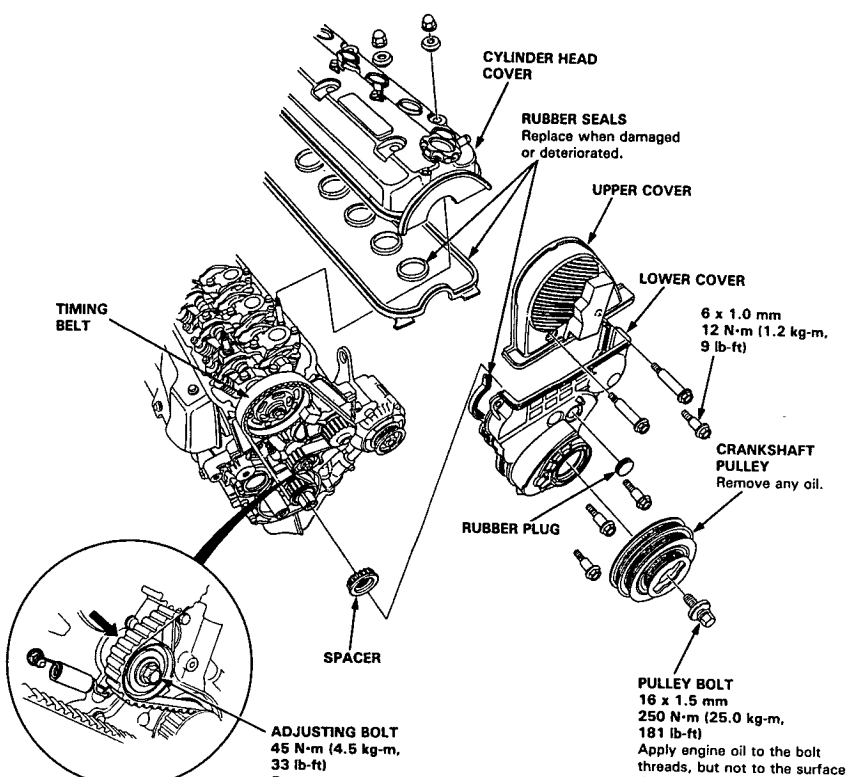

Installation

1. Install the timing belt in the reverse order of removal;
   Only key points are described here.
2. Position the crankshaft and the camshaft pulleys as shown before installing the timing belt.
   A Set the crankshaft so that the No. 1 piston is at top dead center (TDC).
   NOTE: Align the O mark on the teeth side of the timing belt drive pulley to the ▽ pointer on the oil pump.
   B Align the TDC marks on the camshaft pulley with the cylinder head upper surface.

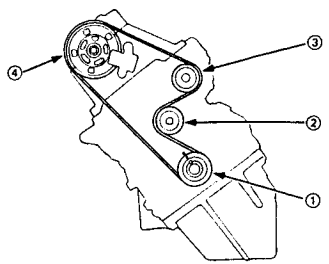

3. Install the timing belt tightly in the sequence shown.
   ① Timing belt pulley (crankshaft) → ② Adjusting Pulley → ③ Water pump pulley → ④ Camshaft pulley.

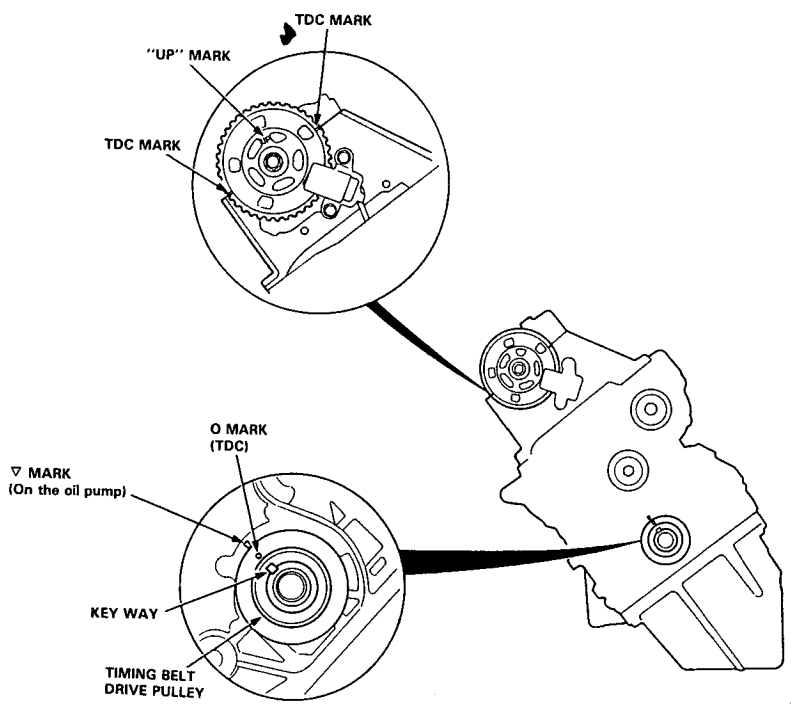

(cont'd)

Timing Belt

Installation (cont'd)

4. Loosen the adjusting bolt, and retighten it after tensioning the belt.

5. Rotate the crankshaft about 5 or 6 turns counter clockwise so that the belt may fit in position on the pulleys.

6. Adjust the timing belt tension (page 6-27).

7. Check the crankshaft pulley and the camshaft pulley at TDC.

CRANKSHAFT PULLEY:

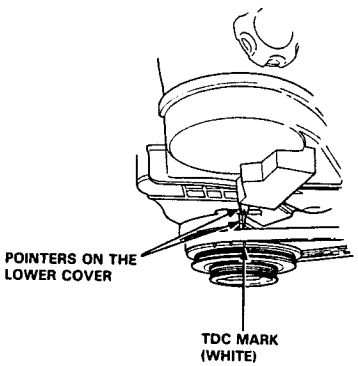

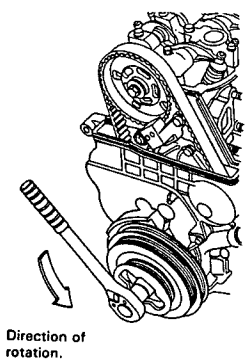

CAMSHAFT PULLEY:

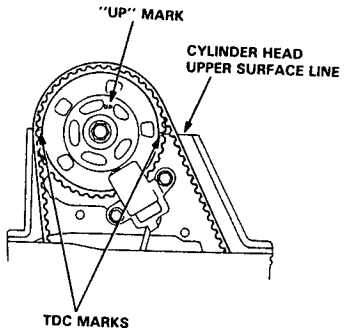

8. If the camshaft pulley is not positioned at TDC, remove the timing belt and adjust the positioning following the procedure on page 6-31, then reinstall the timing belt.

NOTE:
- After installing the timing belt, retorque the crankshaft pulley bolt to 250 N·m (25.0 kg-m, 181 lb-ft).
- Refer to page 6-29 for timing belt removal.

After installation, adjust the tension of each belt.
- See section 23 for alternator belt tension adjustment.
- See section 17 for power steering pump belt tension adjustment.
- See section 22 for air conditioner compressor belt tension adjustment.

Valve Clearance

Adjustment

NOTE:
- The valves should be adjusted when the cylinder head temperature is less than 100°F (38°C).
- After adjusting, retorque the crankshaft pulley bolt to 250 N·m (25.0 kg-m, 181 lb-ft).

1. Remove the cylinder head cover.

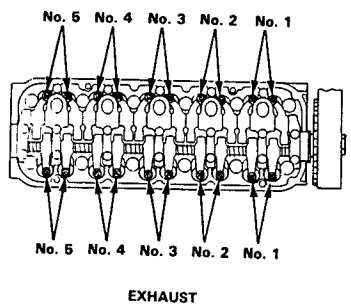

2. Align the No. 1 piston TDC mark with the TDC groove on the No. 1 camshaft holder as shown.

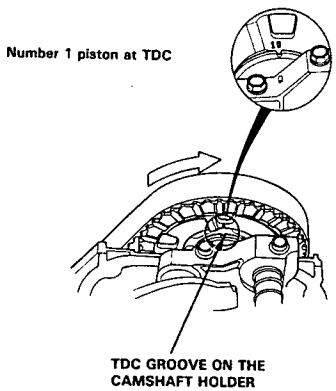

3. Adjust the valves on No. 1 cylinder.

Intake: 0.26 ± 0.02 mm (0.010 ± 0.001 in)
Exhaust: 0.30 ± 0.02 mm (0.012 ± 0.001 in)

4. Loosen the locknut and turn the adjustment screw until the feeler gauge slides back and forth with a slight amount of drag.

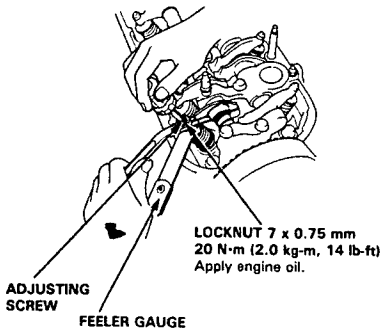

5. Tighten the locknut and check the clearance again. Repeat adjustment if necessary.

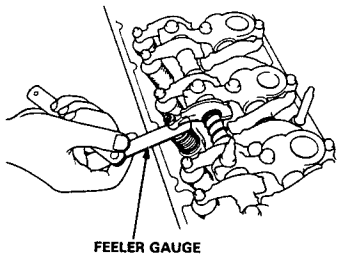

(cont'd)

Timing Belt

Adjustment (cont'd)

6. Rotate the crankshaft 144° counterclockwise (camshaft pulley turns 72°). Align the No. 2 piston TDC mark with the TDC groove on the No. 1 camshaft holder. Adjust the valves on No. 2 cylinder.

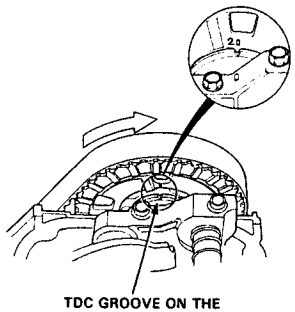

7. Rotate the crankshaft 144° counterclockwise (camshaft pulley turns 72°). Align the No. 4 piston TDC mark with the TDC groove on the No. 1 camshaft holder. Adjust the valves on No. 4 cylinder.

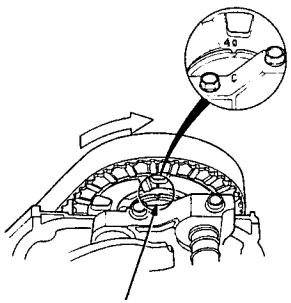

8. Rotate the crankshaft 144° counterclockwise (camshaft pulley turns 72°). Align the No. 5 piston TDC mark with the TDC groove on the No. 1 camshaft holder. Adjust the valves on No. 5 cylinder.

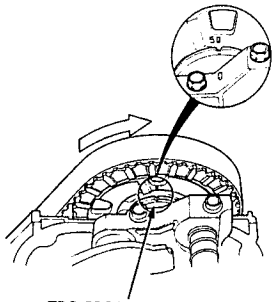

9. Rotate the crankshaft 144° counterclockwise (camshaft pulley turns 72°). Align the No. 3 piston TDC mark with the TDC groove on the No. 1 camshaft holder. Adjust the valves on No. 3 cylinder.

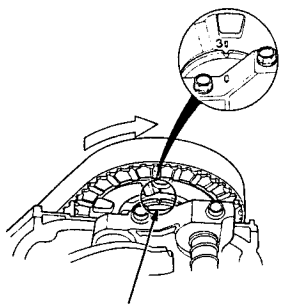

TDC/CKP/CYP Sensors

Replacement

NOTE: Turn the crankshaft so that the No. 1 piston is at top dead center (page 6-31).
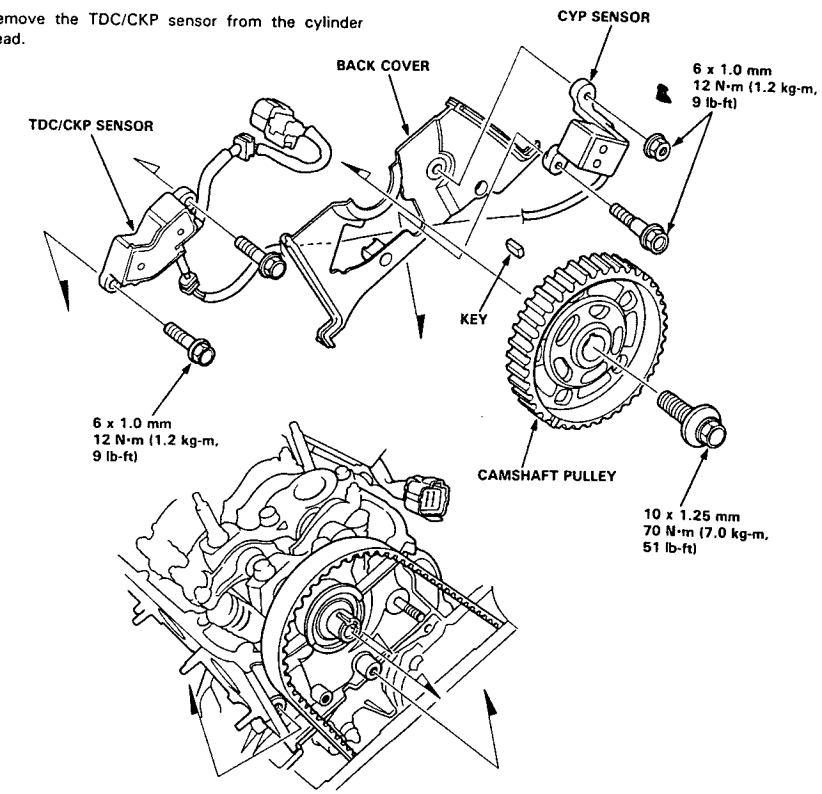
1. Remove the upper cover.
2. Loosen the timing belt adjusting bolt 180°.
3. Push the tensioner to release tension from the belt, then retighten the adjusting bolt.
4. Remove the timing belt from the camshaft pulley.
5. Remove the CYP sensor.
6. Remove the camshaft pulley.
7. Remove the back cover.
8. Remove the TDC/CKP sensor from the cylinder head.
9. Install the TDC/CKP/CYP sensors in the reverse order of removal;
   - Refer to page 6-31 when installing the timing belt.