**Read this before you do any electrical work on the car.**

The VIGOR SRS includes a driver's side airbag, located in the steering wheel hub. In addition, the GS model has a front passenger's airbag located in the dashboard above the glove box. Information necessary to safely service the SRS is included in this Service Manual. Items marked with an asterisk (*) on the contents page include, or are located near, SRS components. Servicing, disassembling or replacing these items will require special precautions and tools, and should therefore be done by an authorized Acura dealer.

**⚠WARNING**

- **To avoid rendering the SRS inoperative, which could lead to personal injury or death in the event of a severe frontal collision, all maintenance must be performed by an authorized Acura dealer.**
- **Improper maintenance, including incorrect removal and installation of the SRS, could lead to personal injury caused by unintentional activation of the airbag (s).**
- **All SRS electrical wiring harnesses are covered with yellow outer insulation. Related components are located in the steering column, center console, dash, and dashboard lower panel, and in the dashboard above the glove box. Do not use electrical test equipment on these circuits.**

NOTE: The radio may have a coded theft protection circuit. Be sure to get the customer's code number before
– Disconnecting the battery.
– Removing the No. 39 (10 A) fuse in the under-hood fuse/relay box.
– Removing the radio.
After service, reconnect power to the radio and turn it on. When the word "CODE" is displayed, enter the customer's 5-digit code to restore radio operation.

# Electrical


Special Tools ..... 23-2
Troubleshooting
Tips and Precautions ..... 23-3
Five-step Troubleshooting ..... 23-5
How to Use This Section
Schematic Symbols ..... 23-6
Wire Color Codes ..... 23-6
Relay and Control Unit Locations
Engine Compartment ..... 23-7
Dashboard ..... 23-10
Seat ..... 23-15
Trunk ..... 23-16

Index to Circuits and Systems
Air Conditioning ..... Section 21
Anti-lock Brake System (ABS) ..... Section 19
Automatic Transmission System ..... Section 14
Battery ..... 23-68
Blower Controls ..... Section 21
Charging System ..... 23-110
*Cigarette Lighter ..... 23-232
Clock ..... 23-230
Connector Identification and Wire Harness Routing ..... 23-17
*Cruise Control ..... 23-290
Fuel Pump ..... Section 11
*Fuses ..... 23-46
PGM-FI Control System ..... Section 11
*Gauges
Circuit Diagram ..... 23-130
Engine Coolant Temperature (ECT) Gauge ..... 23-141
Fuel Gauge ..... 23-139
Speedometer ..... 23-129
Tachometer ..... 23-129
Grounds
Distribution ..... 23-60
*Heater Controls ..... Section 21
*Horn ..... 23-224
*Ignition Switch ..... 23-73
Ignition System ..... 23-98

*A/T Gear Position Indicator ..... 23-174
*Safety Indicator ..... 23-151
*Integrated Control Unit ..... 23-164
*Interlock System ..... 23-144
Lights, Exterior
Back-up Lights ..... 23-200
Brake Lights ..... 23-202
Daytime Running Lights (Canada) ..... 23-176
Front Fog Light ..... 23-175
Front Side Marker/Parking Lights ..... 23-189
Headlights ..... 23-198
License Plate Lights ..... 23-191
Taillights ..... 23-190
Lights, Interior
Ceiling Light ..... 23-193
Courtesy Light ..... 23-193
*Dash lights Brightness Controller ..... 23-218
Rear Reading Light ..... 23-193
Trunk Light ..... 23-207
*Lighting System ..... 23-172
Power Distribution ..... 23-52
Power Door Locks ..... 23-262
Power Mirrors ..... 23-245
Power Relays ..... 23-70
Power Seats ..... 23-272
Power Windows ..... 23-252
Moonroof ..... 23-240
Radiator and Condenser Fan Controls ..... 23-123
*Rear Window Defogger ..... 23-235
Seat Heaters ..... 23-276
*Side Marker/Turn Signal/Hazard Flasher System ..... 23-208
Starting System ..... 23-77
*Stereo Sound System ..... 23-212
*Supplemental Restraint System (SRS) ..... 23-323
*Under-dash Fuse/Relay Box ..... 23-66
Vehicle Speed Sensor (VSS) ..... 23-138
*Wiper/Washers ..... 23-281
Wiring Diagrams ..... 23-368


*Read SRS precautions on page 23-330, then install the short connector (s) on the airbag (s) before working in these areas.

Section 23
Part 2
Pages 23-172 thru 23-355

Sect. 23 - Electrical

## Component Location Index

CAUTION:
- All SRS electrical wiring harnesses are covered with yellow outer insulation.
- Before disconnecting the SRS wire harness, install the short connector (s) on the airbag (s).
- Replace the entire affected SRS harness assembly if it has an open circuit or damaged wiring.

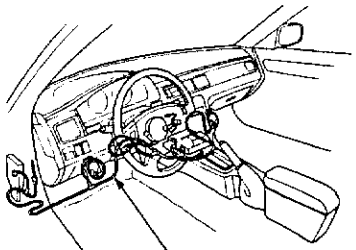

SRS MAIN HARNESS
(Covered with yellow outer insulation)

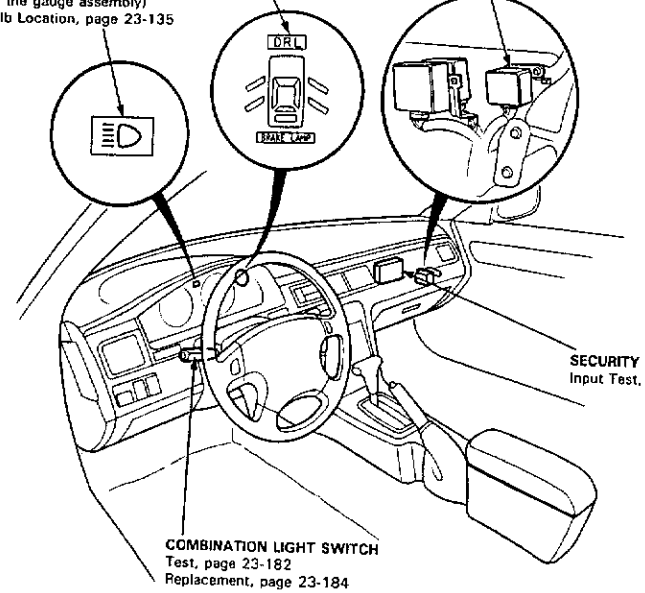


DRL INDICATOR LIGHT (Canada)
(In the gauge assembly)
Circuit Diagram, page 23-130)

DAYTIME RUNNING LIGHTS CONTROL UNIT (Canada)
Input Test, page 23-180

HIGH BEAM INDICATOR LIGHT
(In the gauge assembly)
Bulb Location, page 23-135

SECURITY CONTROL UNIT
Input Test, page 23-315

COMBINATION LIGHT SWITCH
Test, page 23-182
Replacement, page 23-184



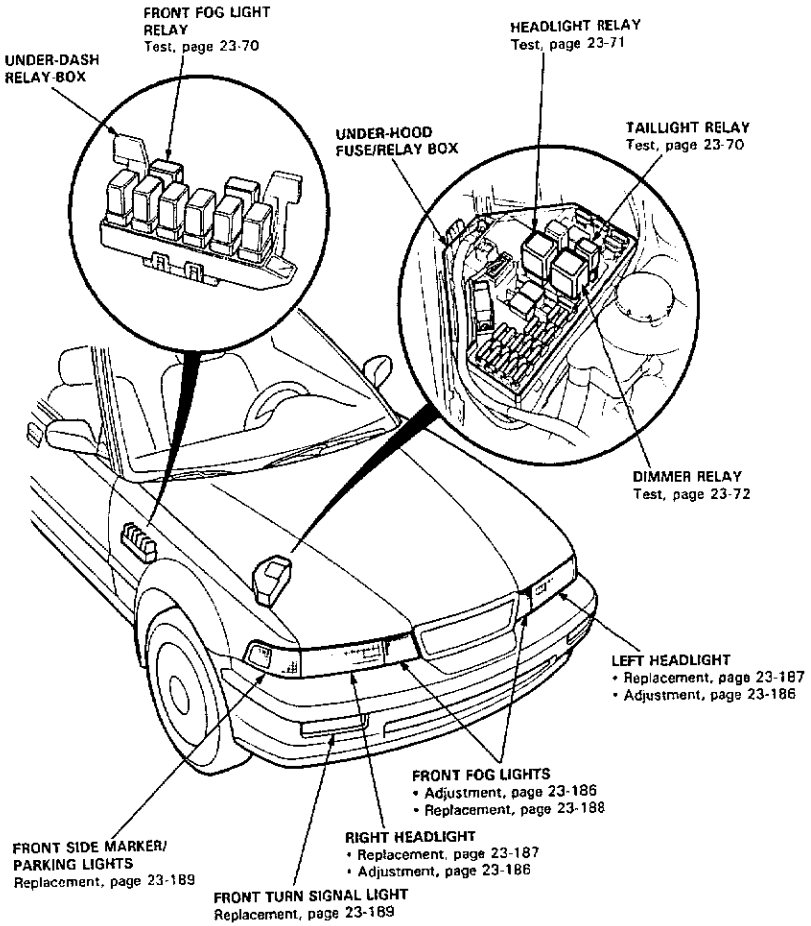

FRONT FOG LIGHT RELAY
Test, page 23-70

UNDER-DASH RELAY BOX

HEADLIGHT RELAY
Test, page 23-71

UNDER-HOOD FUSE/RELAY BOX

TAILLIGHT RELAY
Test, page 23-70

DIMMER RELAY
Test, page 23-72

LEFT HEADLIGHT
- Replacement, page 23-187
- Adjustment, page 23-186

FRONT FOG LIGHTS
- Adjustment, page 23-186
- Replacement, page 23-188

RIGHT HEADLIGHT
- Replacement, page 23-187
- Adjustment, page 23-186

FRONT SIDE MARKER/ PARKING LIGHTS
Replacement, page 23-189

FRONT TURN SIGNAL LIGHT
Replacement, page 23-189

## Circuit Diagram (USA)

NOTE: Different wires with the same color have been given a number suffix to distinguish them (for example, RED/BLU[1] and RED/BLU[2] are not the same).

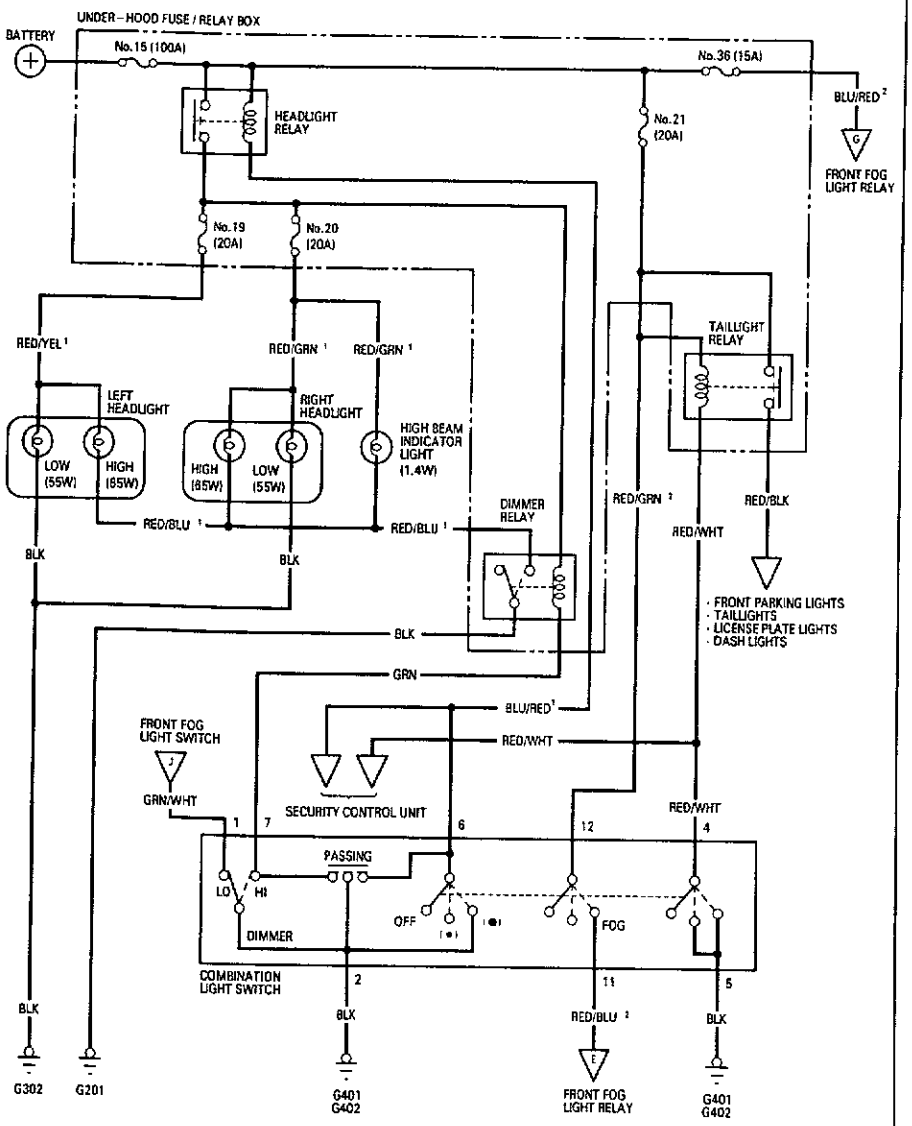




## Circuit Diagram (Front Fog Light)

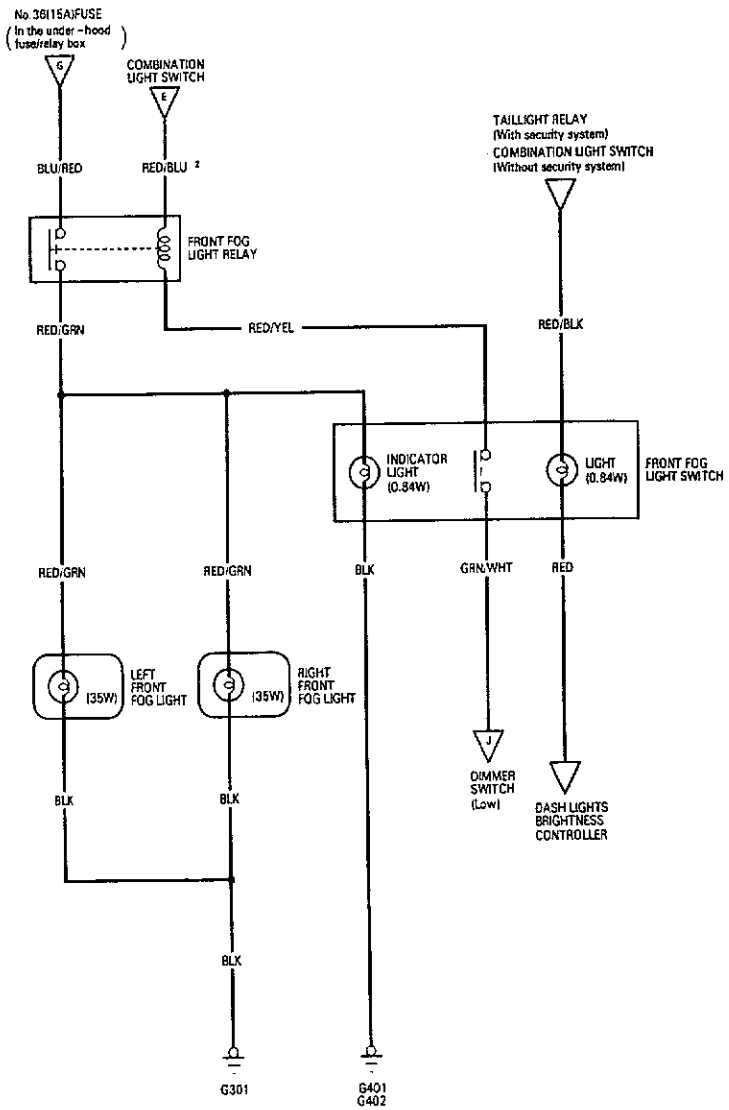

## Circuit Diagram (Canada: With Security System)

NOTE: Different wires with the same color have been given a number suffix to distinguish them (for example, RED/BLU [1] and RED/BLU [2] are not the same).

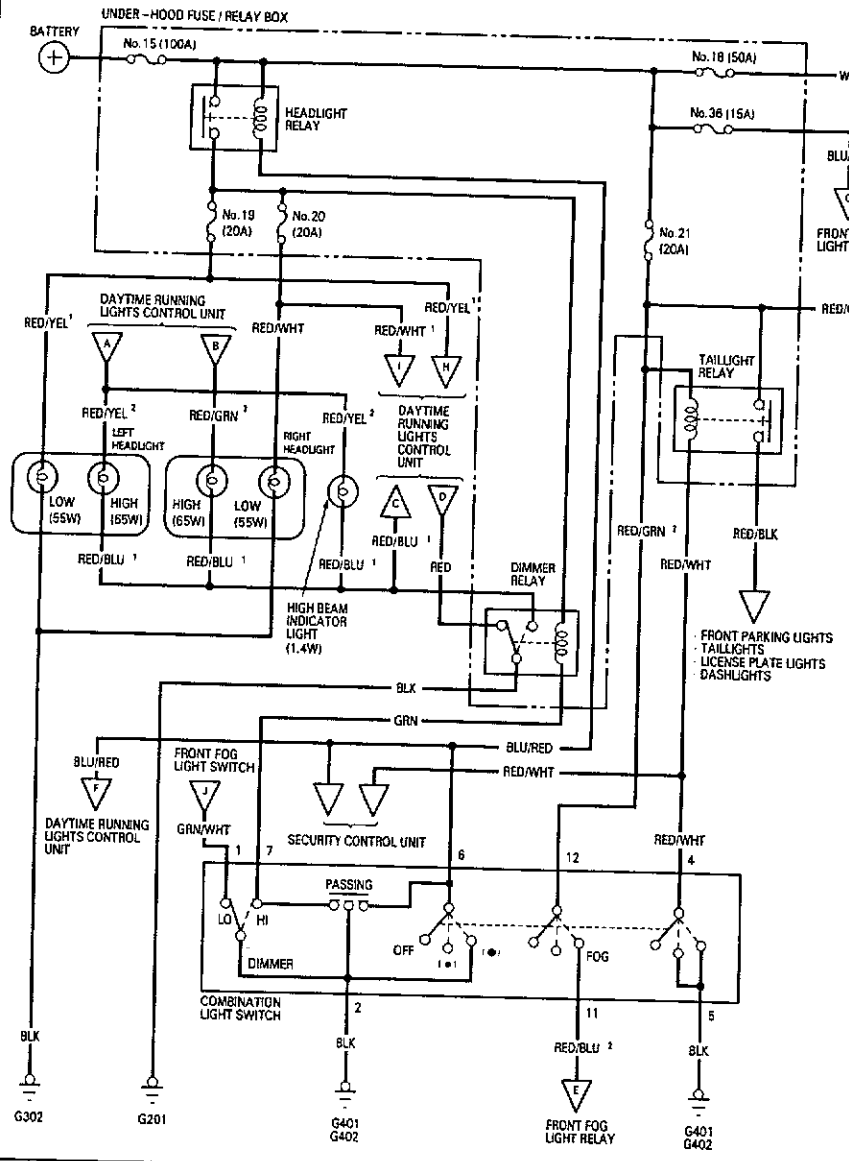




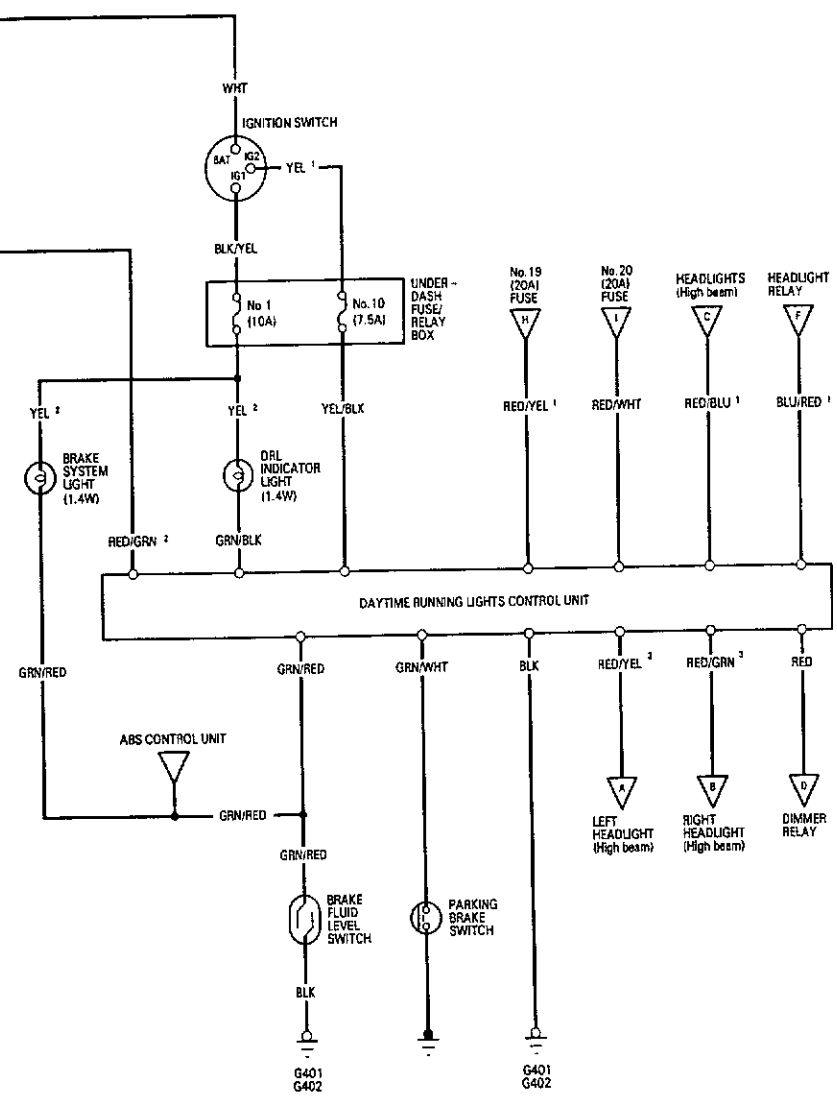

## Circuit Diagram (Canada: Without Security System)

NOTE: Different wires with the same color have been given a number suffix to distinguish them (for example, RED/BLU [1] and RED/BLU [2] are not the same).

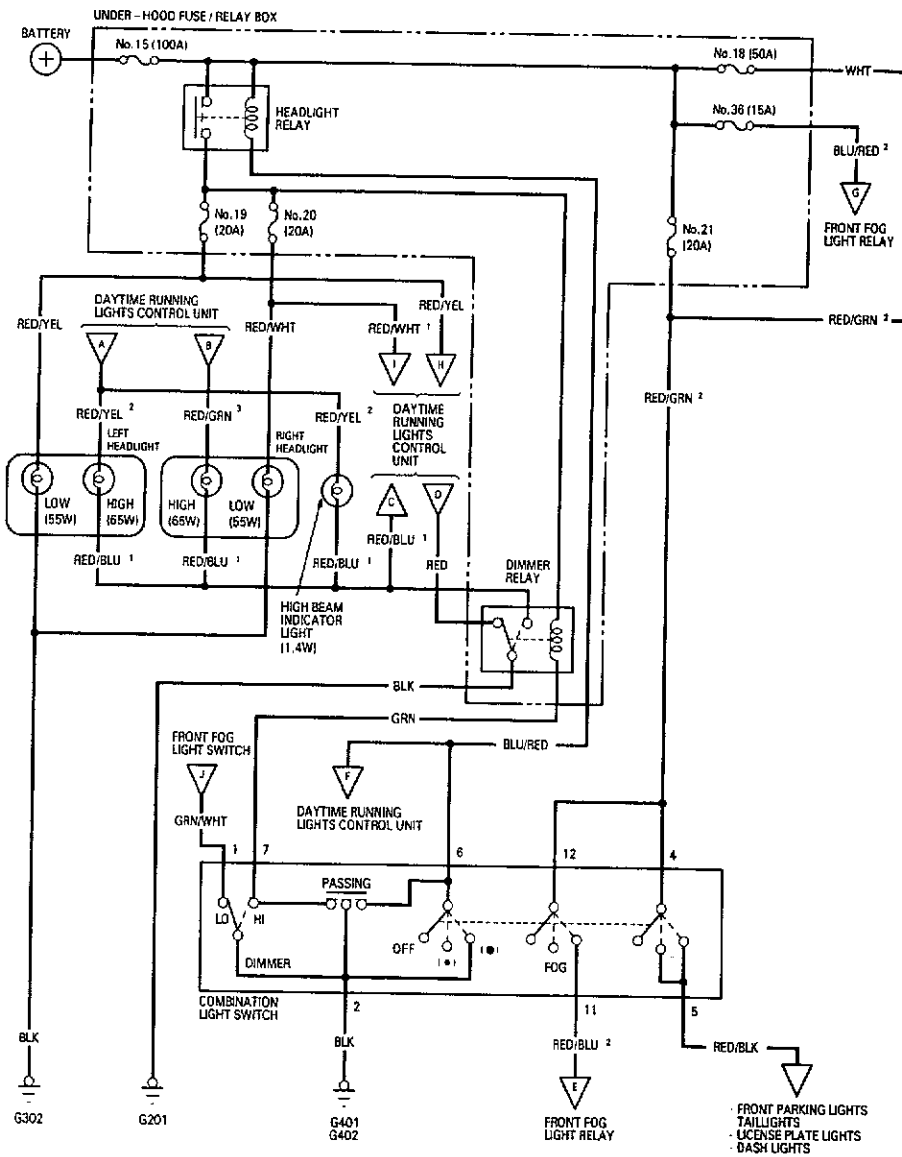


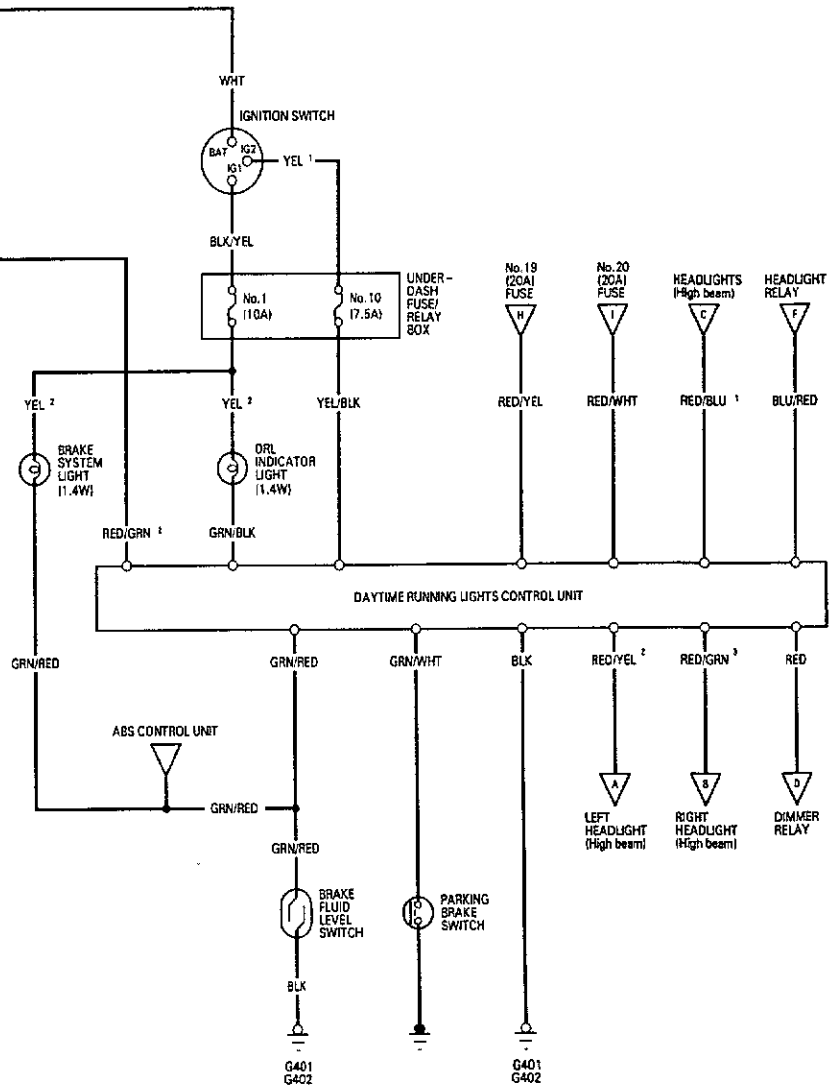

## Daytime Running Lights Control Unit Input Test (Canada)

CAUTION:
- All SRS electrical wiring harnesses are covered with yellow outer insulation.
- Before disconnecting the SRS wire harness, install the short connector (s) on the airbag (s).
- Replace the entire affected SRS harness assembly if it has an open circuit or damaged wiring.

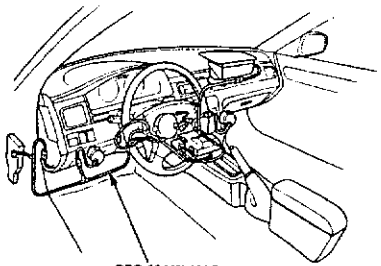


1. Remove the glove box and right kick panel cover (see section 20).
2. Disconnect the 14-P connector from the daytime running lights control unit.
3. Inspect the connector terminals to be sure they are all making good contact.
   - If the terminals are bent, loose or corroded, repair them as necessary, and recheck the system.
   - If the terminals look OK, make the following input tests at the connector terminals.
     - If any test indicates a problem, find and correct the cause, then recheck the system.
     - If all the input tests prove OK, the control unit must be faulty; replace it.

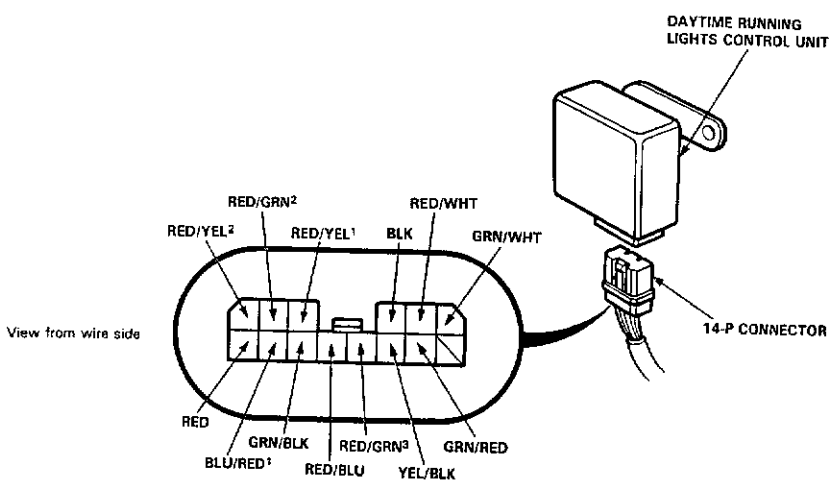




| No. | Wire | Test condition | Test: Desired result | Possible cause if result is not obtained |
|---|---|---|---|---|
| 1 | BLK | Under all conditions. | Check for continuity to ground: There should be continuity. | • Poor ground (G401).<br>• An open in the wire. |
| 2 | RED/GRN2 | Under all conditions. | Check for voltage to ground: There should be battery voltage. | • Blown No. 21 (20 A) fuse (in the under-hood fuse/relay box).<br>• An open in the wire. |
| 3 | BLU/RED1 | Under all conditions. | Check for voltage to ground: There should be battery voltage. | • Faulty headlight relay.<br>• An open in the wire. |
| 4 | RED | Combination light switch "OFF". | Check for continuity to ground: There should be continuity. | • Poor ground (G201).<br>• Faulty dimmer relay.<br>• An open in the wire. |
| 5 | GRN/WHT | Parking brakes switch "ON" (Parking brake lever up). | Check for voltage to ground: There should be 1 V or less. | • Faulty parling brake switch.<br>• An open in the wire. |
| 6 | YEL/BLK | Ignition switch ON. | Check for voltage to ground: There should be battery voltage. | • Blown No 10 (7.5 A) fuse (in the under-dash fuse/relay box).<br>• An open in the wire. |
| 7 | GRN/BLK | Ignition switch ON. | Connect to ground: DRL indicator light should come on. | • Blown No.1 (10 A) fuse (in the under-dash fuse/relay box).<br>• Blown bulb.<br>• An open in the wire. |
| 8 | GRN/RED | Ignition switch ON. | Connect to ground: Brake system light should come on. | • Blown NO.1 (10 A) fuse (in the under-dash fuse/relay box).<br>• Blown bulb.<br>• An open in the wire. |
| 9 | RED/YEL2<br>RED/GRN3<br>RED/BLU1 | Under all conditions. | Check for continuity between the terminals: There should be continuity. | • Blown bulb.<br>• An open in the wire. |
| 10 | RED/YEL1 | Combinatin light switch "•" position. | Check for voltage to ground: There should be battery voltage. | • Blown No. 19 (20 A) fuse (in the under-hood fuse/relay box).<br>• An open in the wire. |
| | RED/WHT | | | • Blown No. 20 (20 A) fuse (in the under-hood fuse/relay box).<br>• An open in the wire. |

## Combination Light/Turn Signal Switch Test

CAUTION:
- All SRS electrical wiring harnesses are covered with yellow outer insulation.
- Before disconnecting the SRS wire harness, install the short connector (s) on the airbag (s).
- Replace the entire affected SRS harness assembly if it has an open circuit or damaged wiring.

1. Remove the dashboard lower cover.
2. Remove the knee bolster and dashboard lower frame.
3. Disconnect the 12-P connector from the main wire harness.
4. Check for continuity between the terminals in each switch position according to the table.

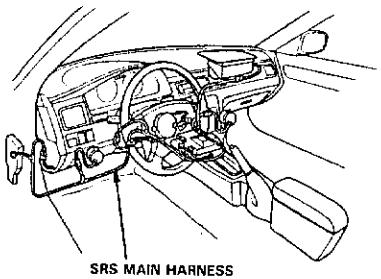


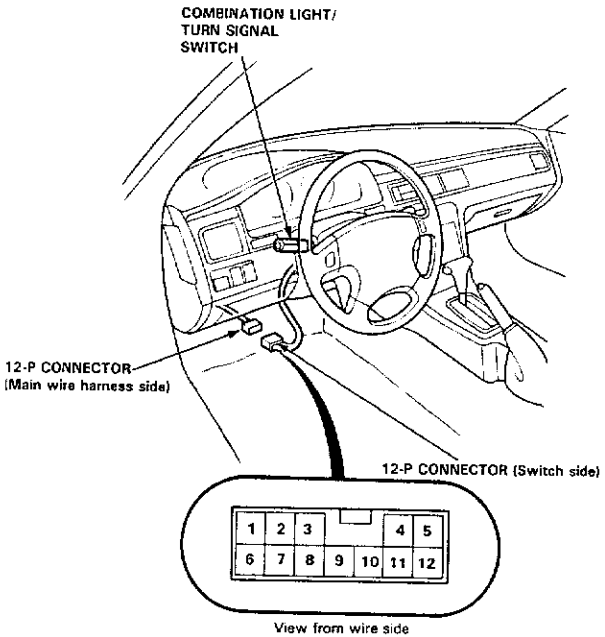




Combination Light Switch:

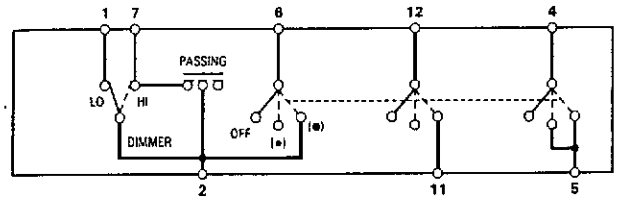


| Position | Terminal | 1 | 2 | 4 | 5 | 6 | 7 | 11 | 12 |
|---|---|---|---|---|---|---|---|---|---|
| Lighting Switch | OFF | ○ | ○ | | | | | | |
| | • | | | ○ | ○ | | | | |
| | • | | ○ | ○ | ○ | ○ | | ○ | ○ |
| Dimmer Switch | LOW | ○ | ○ | | | | | | |
| | HIGH | | ○ | | | | ○ | | |
| Passing Switch | OFF | | | | | | | | |
| | ON | | ○ | | | ○ | ○ | | |

Turn Signal Switch:

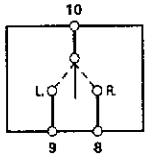


| Position | Terminal | 8 | 9 | 10 |
|---|---|---|---|---|
| RIGHT | | ○ | | ○ |
| NEUTRAL | | | | |
| LEFT | | | ○ | ○ |

## Combination Light Switch Replacement

CAUTION:
- All SRS electrical wiring harnesses are covered with yellow outer insulation.
- Before disconnecting the SRS wire harness, install the short connector (s) on the airbag (s).
- Replace the entire affected SRS harness assembly if it has an open circuit or damaged wiring.

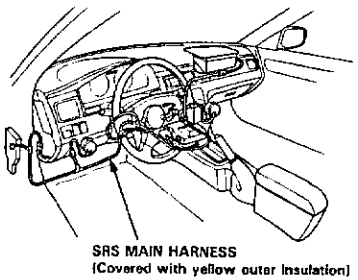


1. Remove the dashboard lower cover and knee bolster.

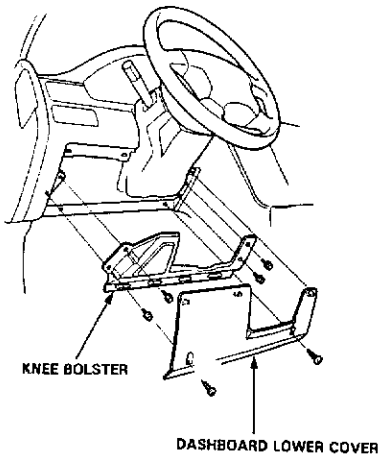


2. Remove the steering column covers.

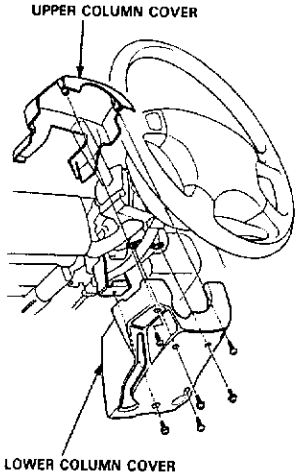


3. Disconnect the 12-P connector from the combination light switch, then remove the two screws and the switch.

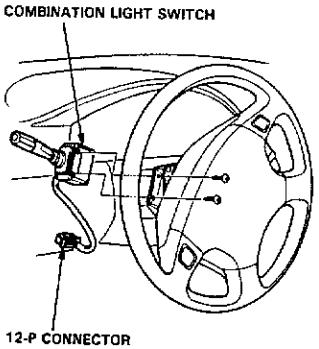




## Front Fog Light Switch Test

CAUTION:
- All SRS electrical wiring harnesses are covered with yellow outer insulation.
- Before disconnecting the SRS wire harness, install the short connector (s) on the airbag (s).
- Replace the entire affected SRS harness assembly if it has an open circuit or damaged wiring.

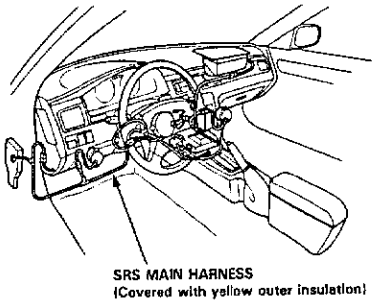


1. Remove the front fog light switch.

   NOTE: Be careful not to damage the front fog light switch and instrument panel.

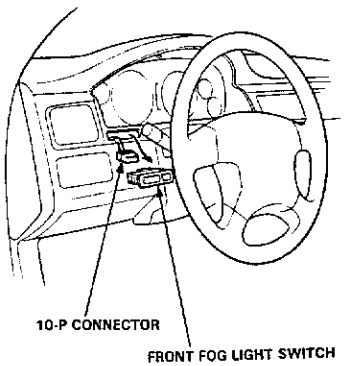


2. Check for continuity between the terminals in each switch position according to the table.

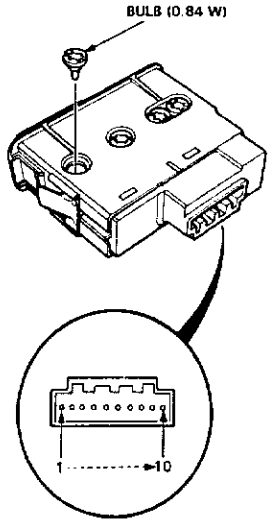


| Position \ Terminal | 9 | 10 | 1 | 4 | | 7 | 8 |
|---|---|---|---|---|---|---|---|
| OFF | | | ○ | | ○ | | ○ |
| ON | ○ | ○ | | ○ | ○ | ○ | |

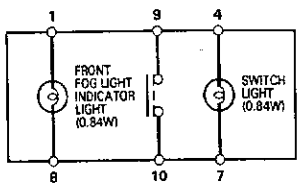

# Headlights/Front Fog Lights

## Adjustment

Adjust the headlights and front fog lights to local requirements.

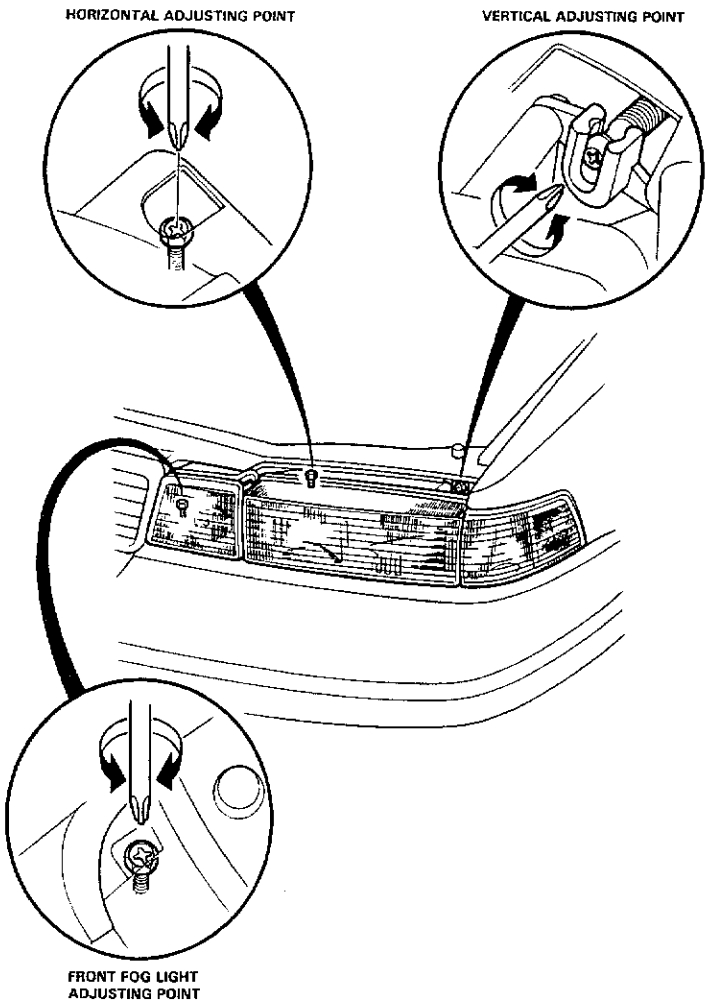




## Headlight Replacement

1. Remove the front grille.

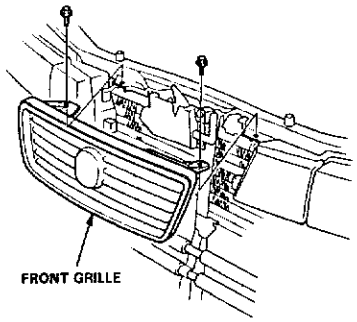


2. Remove the front side marker/parking lights.

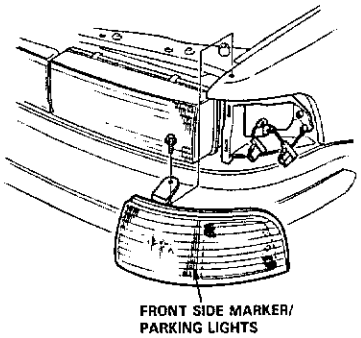


3. Remove the front bumper (see section 20).

4. Remove the five headlight mounting bolts then pull out the headlight and disconnect the connectors from it.

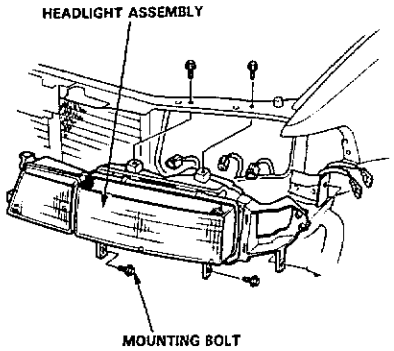


5. After replacement, adjust the headlights to local requirements.

# Headlights/Front Fog Lights

## Headlight Bulb Replacement

CAUTION:
- Halogen headlights can become very hot in use; do not touch them or the attaching hardware immediately after they have been turned off.
- Do not try to replace or clean the headlights with the lights on.

1. Disconnect the 2-P connectors from each bulb.
2. Turn each bulb assembly to open position, then remove it.

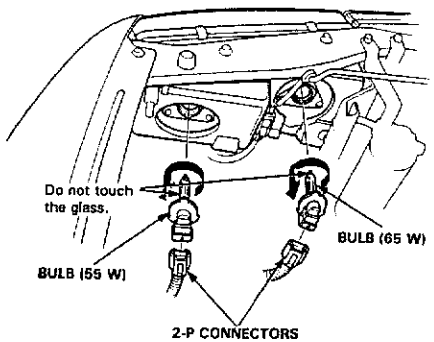


## Front Fog Light Replacement

CAUTION:
- Front fog lights can become very hot in use; do not touch them or the attaching hardware immediately after they have been turned off.
- Do not try to replace or clean the front fog lights with the lights on.

1. Remove the front grille (see page 23-187).
2. Remove the three mount bolts, then pull out the front fog light assembly from the headlight.

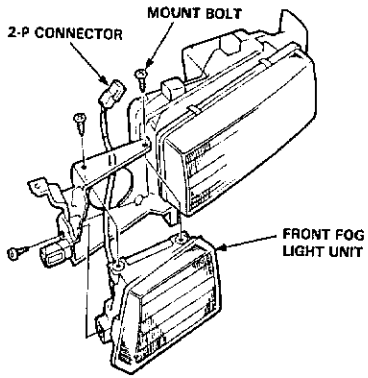


3. Disconnect the 2-P connector.
4. Remove the cover cap, then replace the bulb.

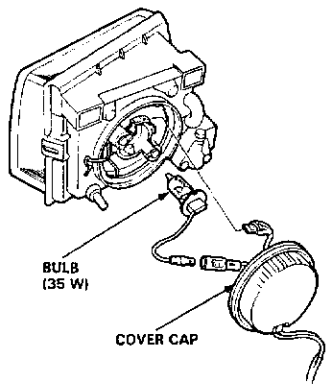


5. After replacement, adjust the front fog lights to local requirements



# Front Turn Signal Lights

## Replacement

1. Remove the screw and pull the light assembly out of the front bumper.

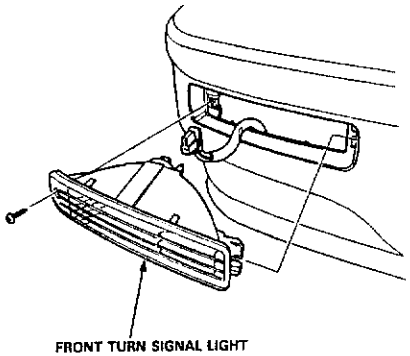


2. Turn the bulb socket 45° counterclockwise to remove it from the housing.

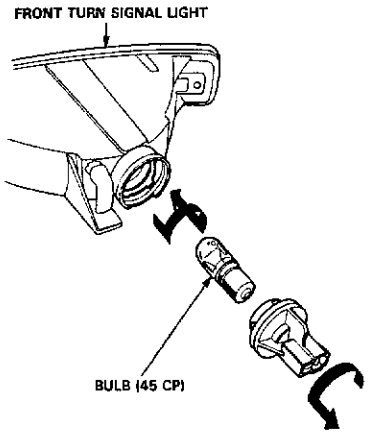


# Parking Lights

## Replacement

1. Remove the screw and separate the front side marker/parking lights from the headlight

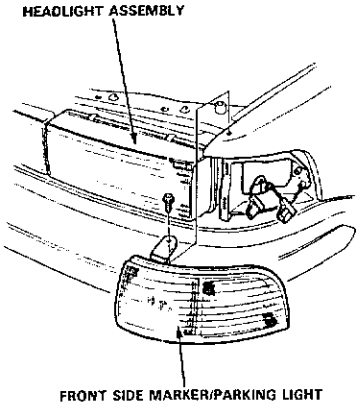


2. Turn the bulb socket 45° counterclockwise to remove it from the housing.

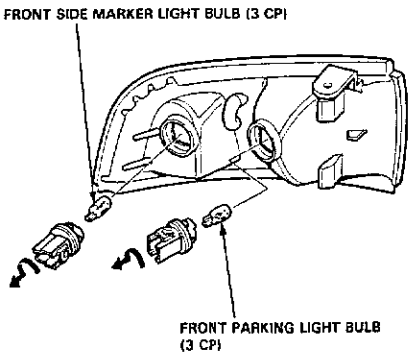

# Taillights

## Replacement

1. Open the trunk lid and remove the rear trim panel.

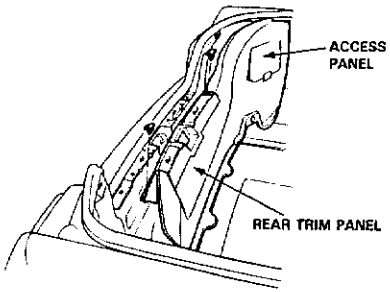


2. Disconnect the 8-P connector from the taillight assembly.
3. Remove the five mount nuts, then pull out the taillight assembly.

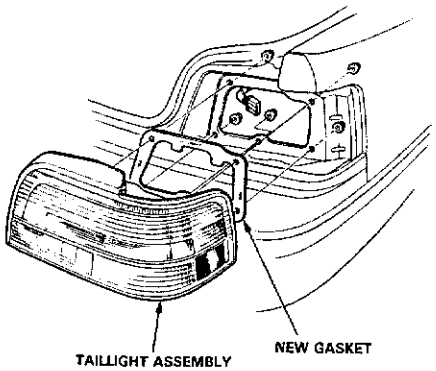


NOTE:
- Inspect the gasket; replace if it is distorted or stays compressed.
- After installation, run water over the taillights to make sure they do not leak.

## Bulb Replacement

1. Open the trunk lid and remove the access panel
2. Remove the bulb from the bulb housing.

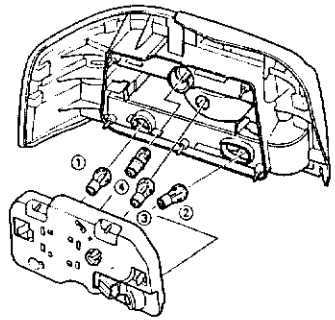

①: BRAKE LIGHT/TAILLIGHT BULB (32 CP/3 CP)

②: BRAKE LIGHT/TAILLIGHT BULB (32 CP/3 CP)

③: BACK-UP LIGHT BULB (32 CP)

④: TURN SIGNAL LIGHT BULB (45 CP)



# License Plate Lights

## Replacement

1. Remove the four screws and disconnect the 4-P connector.

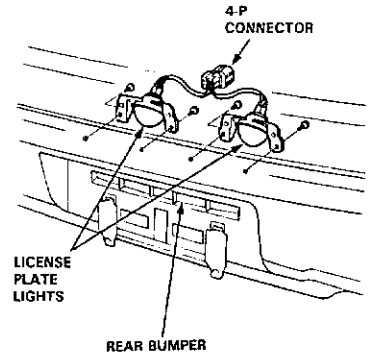


2. Turn the bulb socket 45° counterclockwise to remove it from the housing.

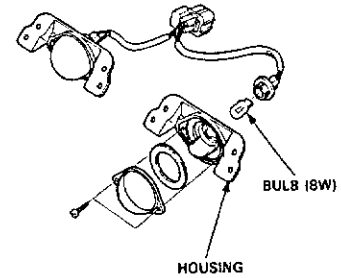


3. If necessary, separate the lens from the housing by removing the two screws.

# Glove Box Light

## Test

1. Open the glove box and disconnect the 2-P connector.

   NOTE: If necessary, remove the glove box.

2. There should be continuity between the A and B terminals with a bulb installed. There should be no continuity when the switch is pushed.

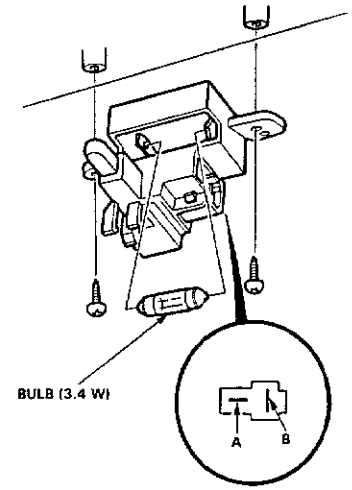


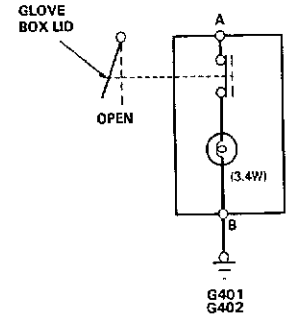

# Vanity Mirror Lights

## Test

1. Remove the two screws from the sunvisor bracket.
2. Disconnect the connector and remove the sunvisor.

   NOTE: Passenger's vanity mirror is shown, driver's vanity mirror is similar.

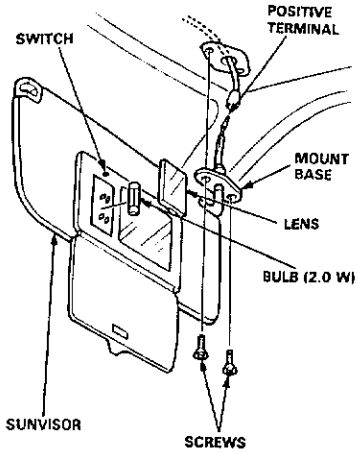


3. There should be continuity between the positive terminal and mount base (ground) with the mirror cover open and bulb installed. There should be no continuity when the mirror cover is closed.
4. If necessary, pry off the lens and replace the bulb.

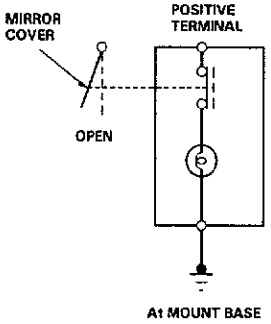




# Ceiling/Reading/Courtesy/Trunk Lights

## Component Location Index

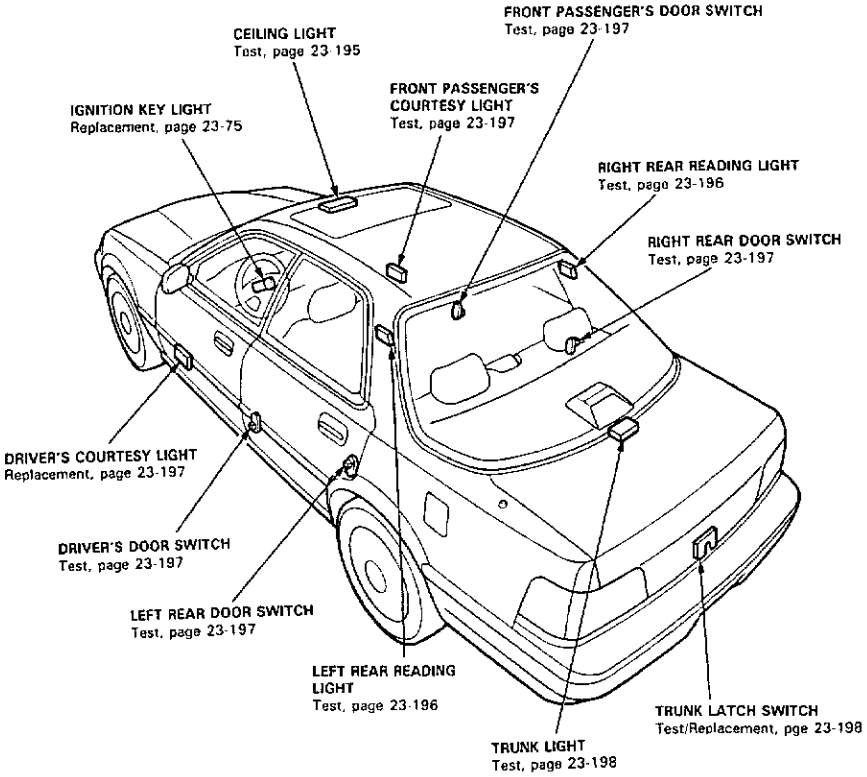

## Circuit Diagram

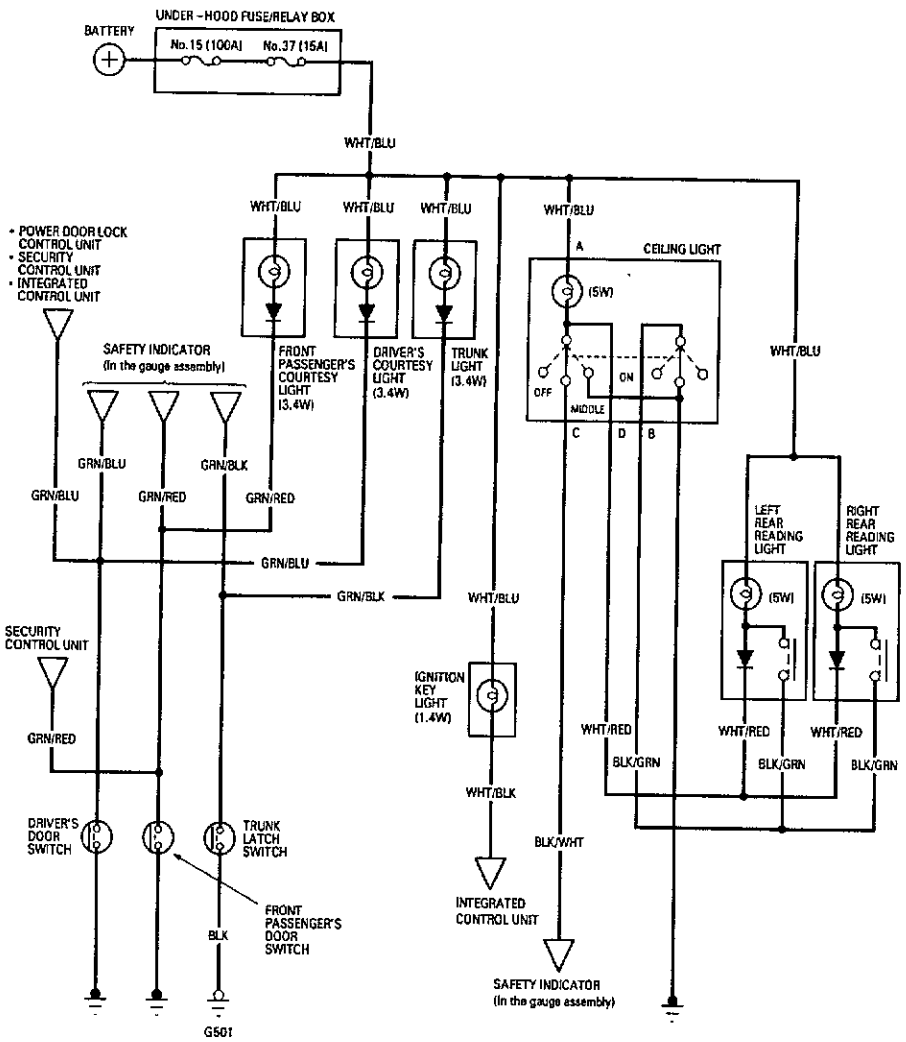




## Ceiling Light Test/Replacement

1. Turn the light switch OFF.
2. Pry off the lens.
3. Remove the two bolts and the housing.
4. Disconnect the 4-P connector from the housing.

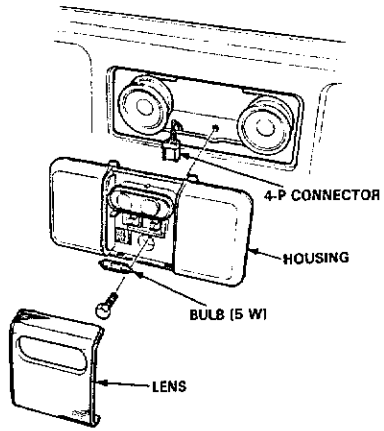


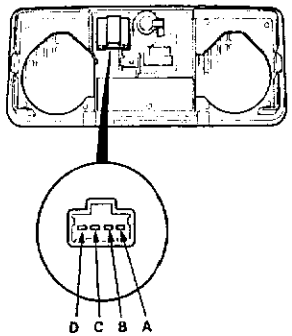


5. Check for continuity between the terminals in each switch position according to the table.

| Terminal / Position | A | | D | C | B |
|---|---|---|---|---|---|
| OFF | ○ | ⊖ | ○ | | |
| MIDDLE | ○ | ⊖ | ○ | ○ | |
| ON | ○ | ⊖ | ○ | | |

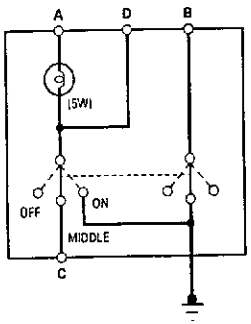

## Rear Reading Light Test/Replacement

1. Turn the front ceiling light switch OFF.
2. Pry out the rear reading light.

   NOTE: Be careful not to damage the C-pillar trim panel.
3. Disconnect the 3-P connector from the housing.

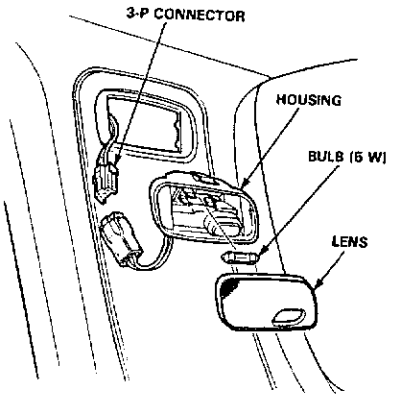


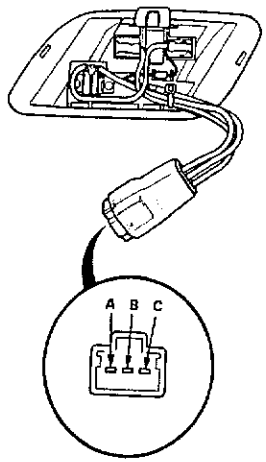


View from terminal side

4. Check for continuity between the terminals in each switch position according to the table.

| Terminal / Position | C | | A | | B |
|---|---|---|---|---|---|
| OFF | ○ | ⊖ | | ▶ | ○ |
| ON | ○ | ⊖ | ○ | ▶ | ○ |

From No.37 (15A) FUSE
(Under-hood fuse/relay box)

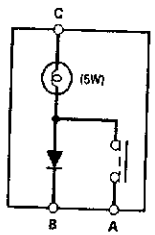




## Courtesy Lights Replacement

NOTE: The bulb or lens alone can be replaced without removing the door panel.

1. To replace the entire light, remove the door panel (see section 20).
2. Remove the two screws and the retainer plate, and remove the light housing from the door panel.
3. Disconnect the 2-P connector and remove the light.

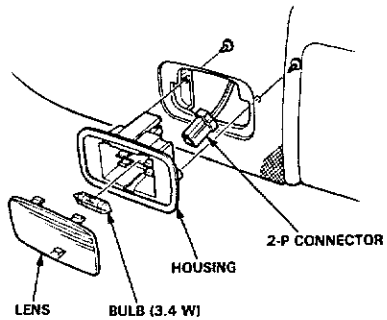


From No.37 (15A) FUSE
(Under-hood fuse/relay box)

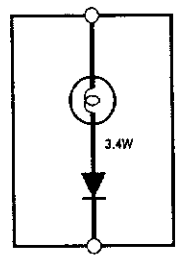


To DOOR SWITCH

## Door Switch Test

1. Remove the screw, and pull the switch out.
2. Disconnect the 1-P connector and remove the switch.

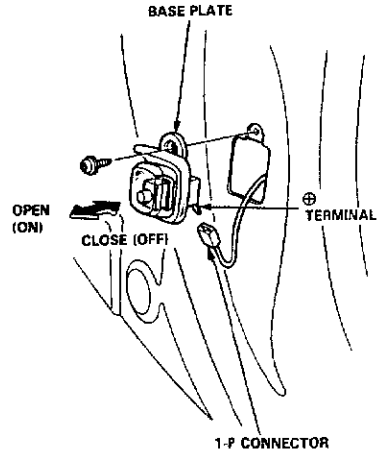


3. Check for continuity between the terminals in each switch position according to the table.

| Terminal / Position | ⊕ TERMINAL | BASE PLATE |
|---|---|---|
| CLOSE | | |
| OPEN | ○ | ○ |

## Trunk Light Test/Replacement

1. Pry off the trunk light lens from the housing.
2. Pry out the light assembly.
3. Disconnect the 2-P connector from the housing.
4. Make sure that the bulb is OK. Check for continuity between A (+) and B (−) terminals.

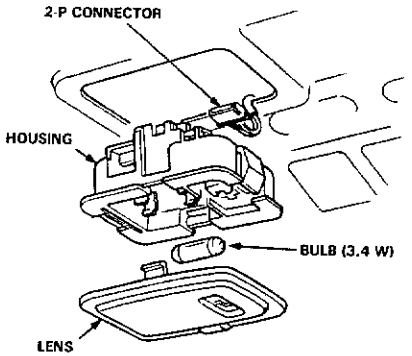


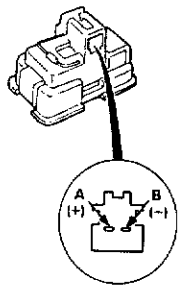


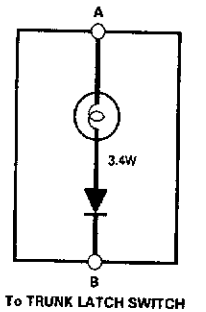


## Latch Switch Test/Replacement

1. Open the trunk lid and remove the trunk rear trim panel.
2. Disconnect the 2-P connector from the trunk latch.
3. Check for continuity between the terminals in each switch position according to the table.

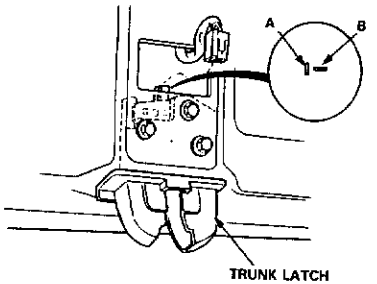


| Position \ Terminal | A | B |
|---|---|---|
| OPEN | ○ | ○ |
| CLOSE | | |

4. If necessary, remove the three bolts from the trunk lid, then remove the trunk latch assembly. The switch cannot be replaced separately.

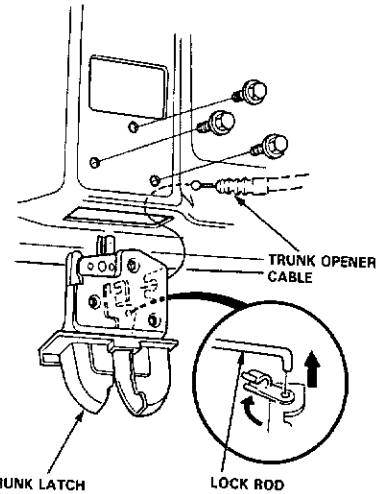

# Back – up Lights

## Circuit Diagram

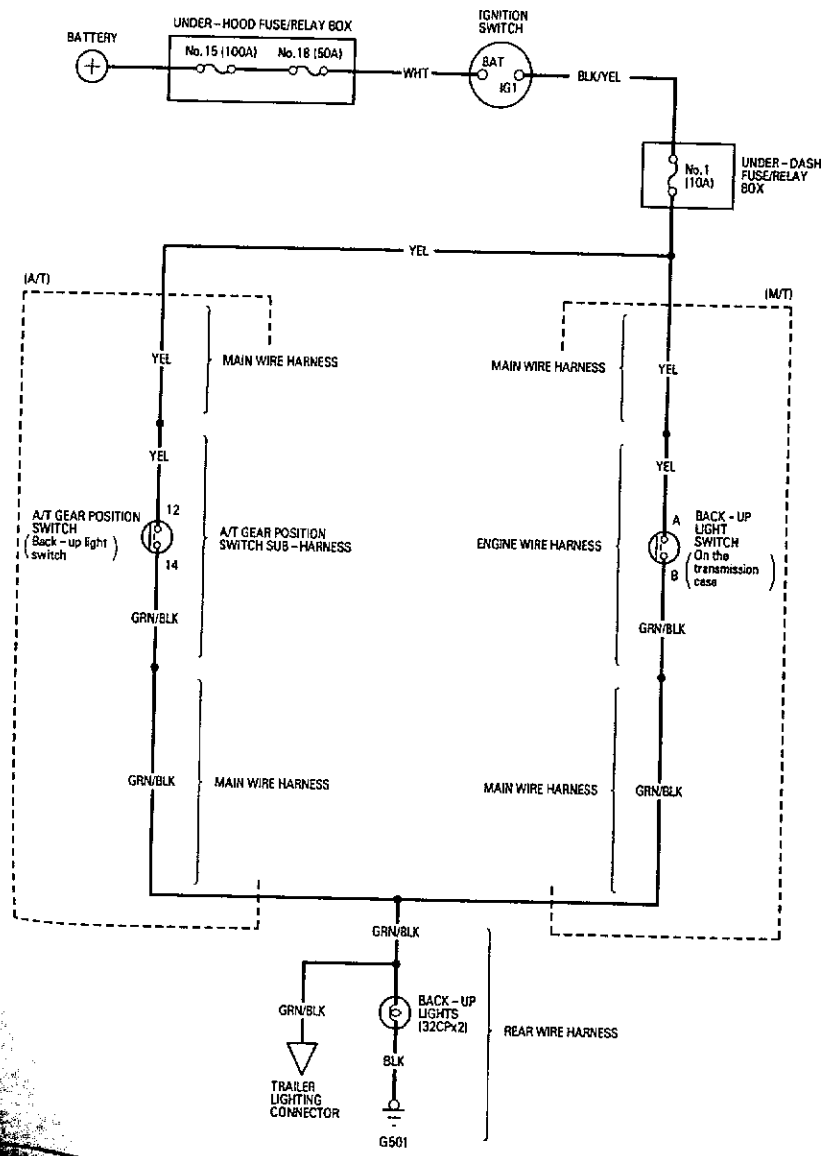


## Test

**Manual Transmission:**
NOTE: Check the No.1 (10A) fuse in the under-dash fuse/relay box before testing.

1. Test the back-up light switch by placing the shift lever in reverse and turning the ignition switch to ON.
2. If the back-up lights do not go on, check the back-up light bulbs in the taillight assembly.
3. If the fuse and bulbs are OK, disconnect the connector from the back-up light switch.

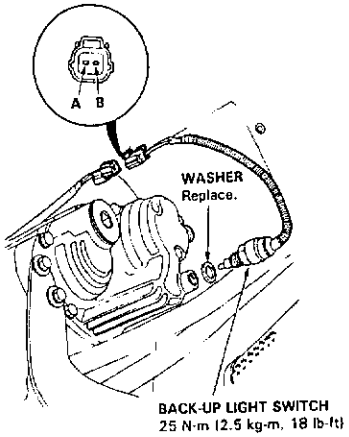


4. Check for continuity between the terminals in each switch position according to the table.

| Position \ Terminal | A | B |
|---|---|---|
| REVERSE | ○ | ○ |
| ALL EXCEPT REVERSE | | |

- If there is no continuity, replace the back-up light switch.
- If there is continuity, but the back-up lights do not go on, check for:
  - Poor ground (G501).
  - An open in the YEL or GRN/BLK wire.

**Automatic Transmission:**
NOTE: Check the No.1 (10A) fuse in the under-dash fuse/relay box before testing.

1. Test the back-up light switch by shifting the shift lever to [R] and turning the ignition switch ON (II).
2. If the back-up lights do not go on, check the back-up light bulbs in the taillight assembly.
3. If the fuse and bulbs are OK, disconnect the 14-P connector from the A/T gear position switch (back-up light switch).

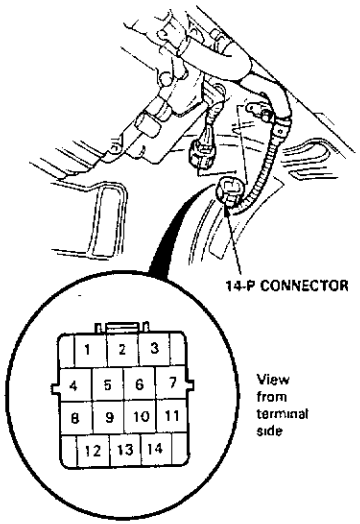


4. Check for continuity between the No.12 and No.14 terminals. Move the lever back and forth at the [R] position without touching the push button, and check for continuity within the range of free play of the shift lever.

- If there is no continuity within the range of free play, adjust the A/T gear position switch (see section 14).
- If there is continuity, but the back-up lights do not go on, check for:
  - Poor ground (G501).
  - An open in the YEL or GRN/BLK wire

# Brake/High Mount Brake Light

## Circuit Diagram

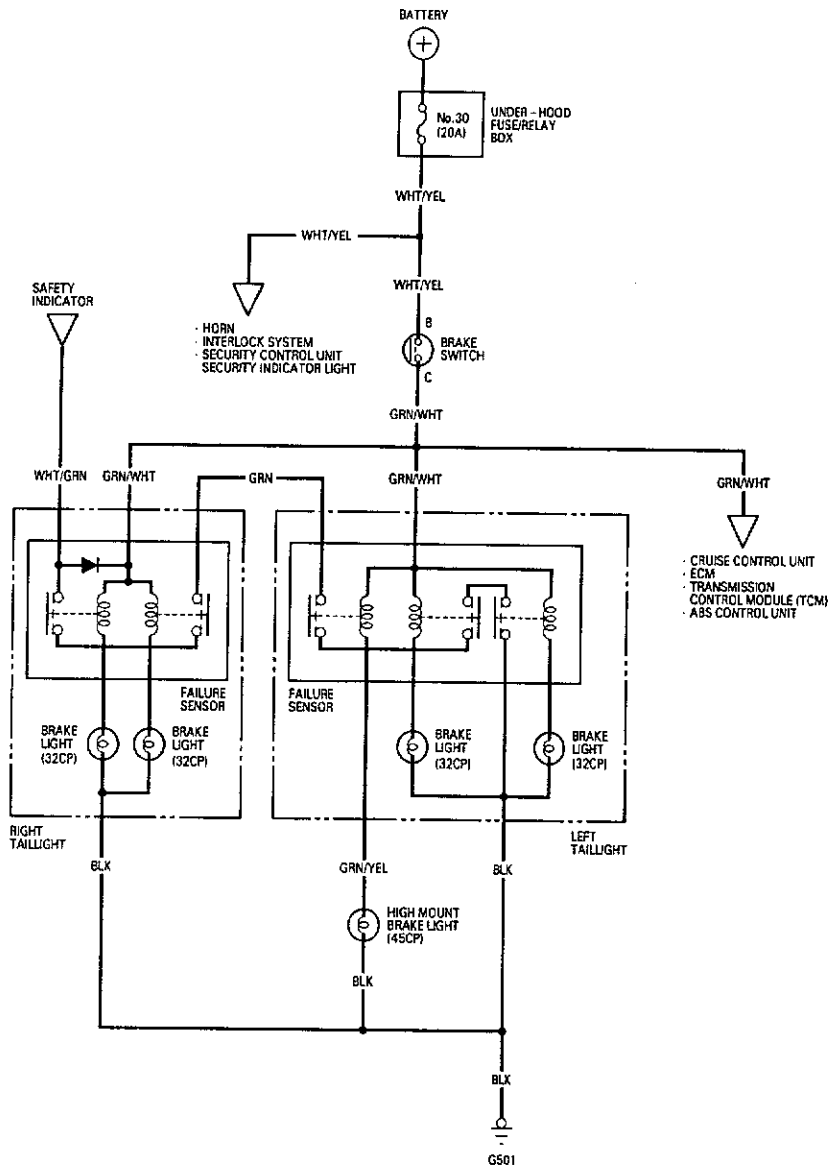




## Brake Switch Test

1. If the brake lights do not go on, check the No.30 (20A) fuse in the under hood fuse/relay box, and the brake light bulbs in the taillight assembly and high mount brake light.
2. If the fuse and bulbs are OK, disconnect the 4-P connector from the brake switch

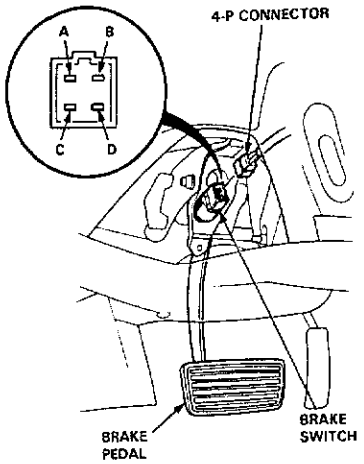


3. Check for continuity between the B and C terminals. There should be continuity with the brake pedal pushed.
   - If there is no continuity, replace the brake switch or adjust pedal height (see section 19).
   - If there is continuity, but the brake lights do not go on, inspect for:
     - Poor ground (G501).
     - An open in the WHT/GRN or GRN/WHT wire.
     - Faulty brake light failure sensors (see page 23-157 ).

## High Mount Brake Light Replacement

1. Remove the rear shelf panel (see section 20)
2. Open the trunk lid and disconnect the 2 P connector from the high mount brake light
3. Remove the two nuts, then remove the high mount brake light from the rear shelf.

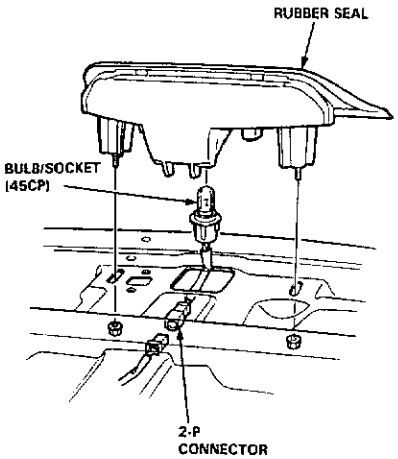


4. Install the high mount brake light in the reverse order of removal. Clean the rear window glass before installing the light. Make sure the rubber seal on the light is touching the glass all the way around.

# Dash Lights Brightness Controller

## Component Location Index

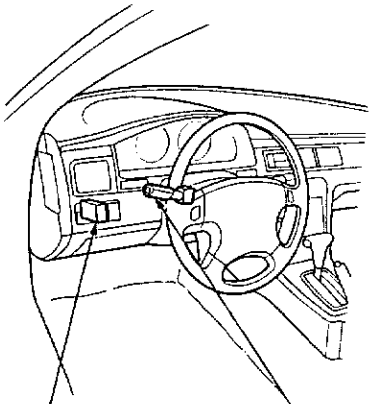

DASH LIGHTS BRIGHTNESS CONTROLLER
• Input Test/Removal, page 23-207

COMBINATION LIGHT SWITCH
Test, page 23-182
Replacement, page 23-184

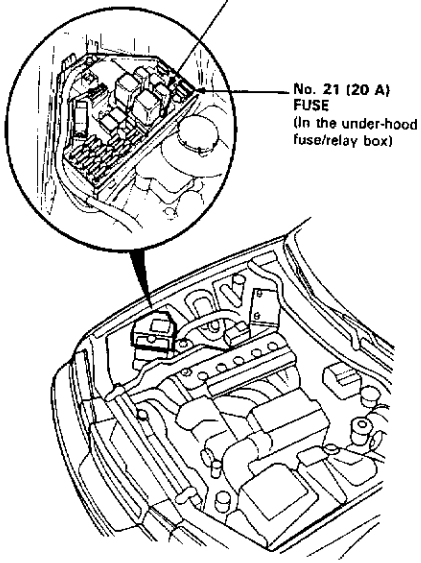

TAILLIGHT RELAY
Test, page 23-70

No. 21 (20 A) FUSE
(In the under-hood fuse/relay box)



## Circuit Diagram (With Security System)

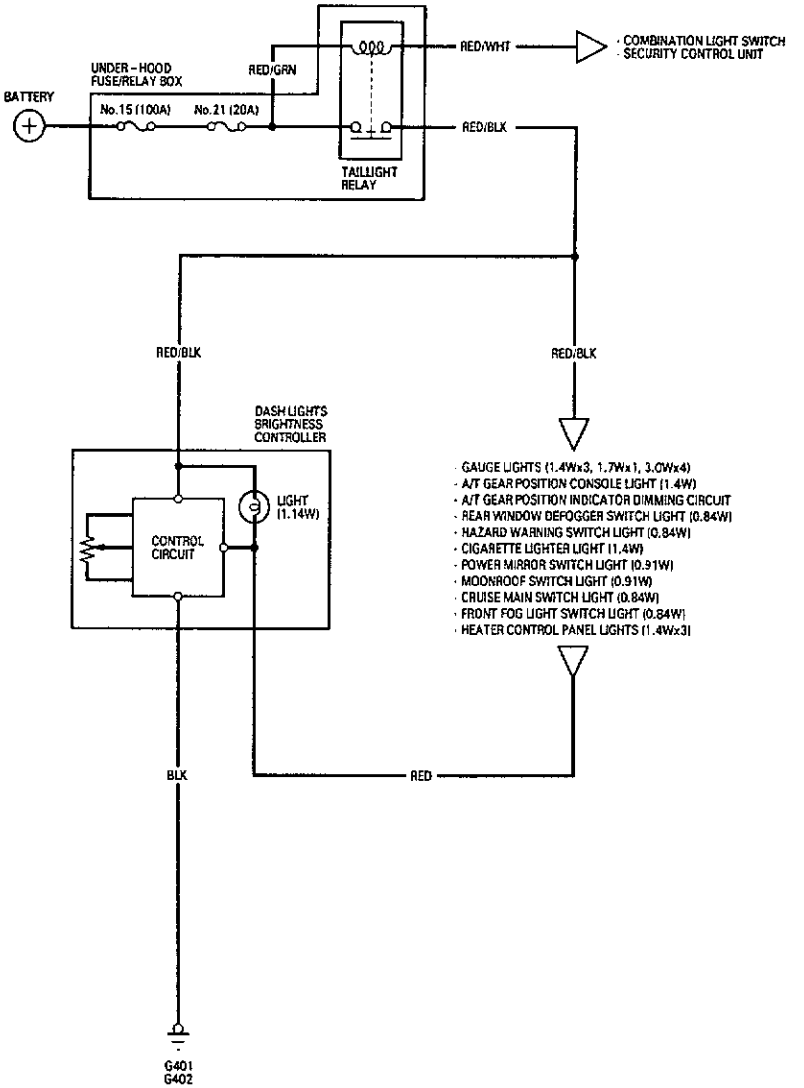

# Dash Lights Brightness Controller

## Circuit Diagram (Without Security System)

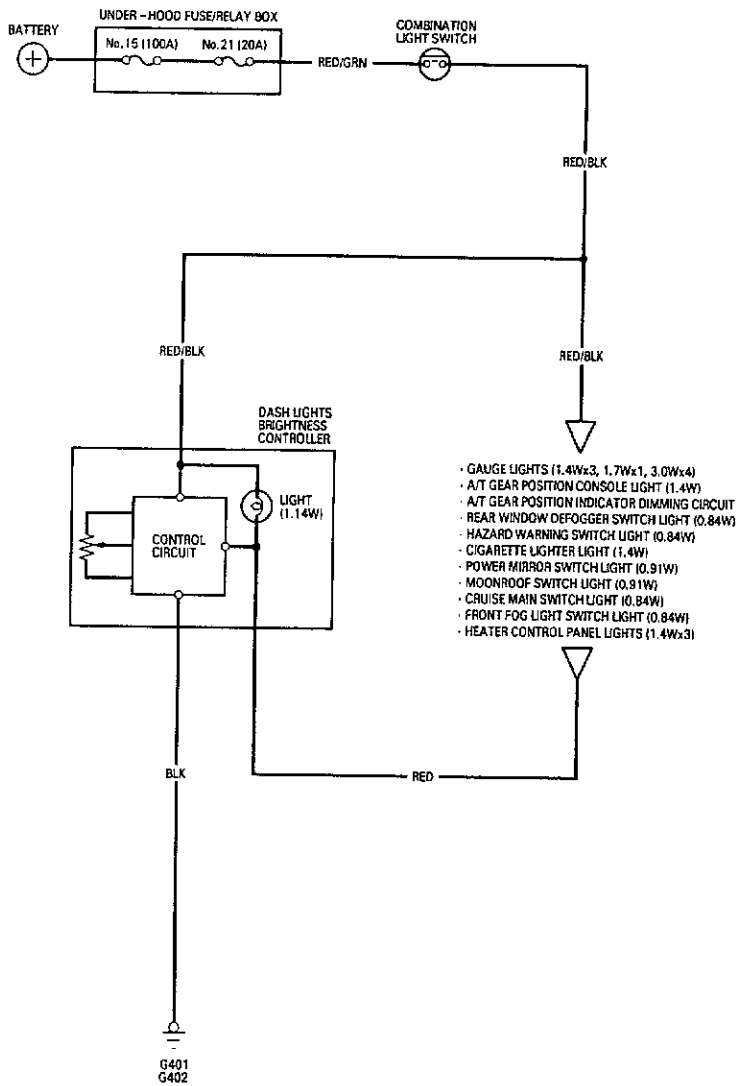




## Controller Input Test

NOTE: The control unit is built into the dash lights brightness controller.

Carefully pry the controller out of the dashboard, then disconnect the 3-P connector from the controller. Inspect the connector terminals to be sure they are all making good contact.

- If the terminals are bent, loose or corroded, repair them as necessary, and recheck the system.
- If the terminals look OK, make the following input tests at the connector.
  - If any test indicates a problem, find and correct the cause, then recheck the system.
  - If all the input tests prove OK, the controller must be faulty; replace it.

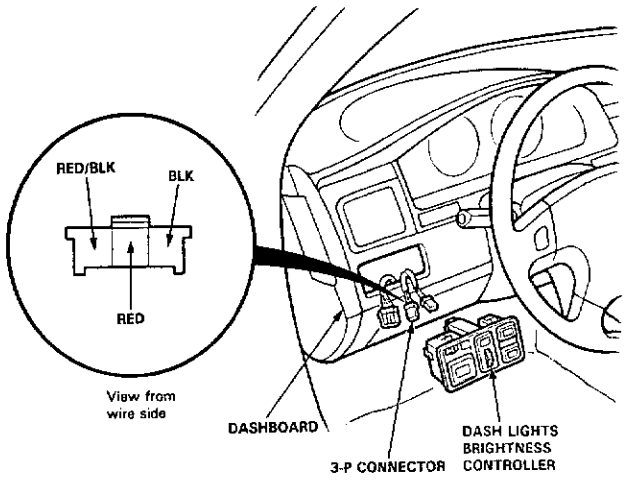


| No. | Terminal | Test condition | Test: Desired result | Possible cause if result is not obtained |
|---|---|---|---|---|
| 1 | BLK | Under all conditions. | Check for continuity to gound: There should be continuity. | • Poor ground (G401, G402)<br>• An open in the wire. |
| 2 | RED/BLK | Combination light switch ON. | Check for voltage to ground: There should be battery voltage. | • Blown No.21 (20 A) fuse (in the under-hood fuse/relay box).<br>• Faulty combination light switch.<br>• Faulty taillight relay.<br>• An open in the wire. |
| 3 | RED | Combination light switch ON. | Connect to ground: Dash lights should come on full bright. | • An open in the wire. |

# Side Marker/Turn Signal/Hazard Flasher System

## Component Location Index

CAUTION:
- All SRS electrical wiring harnesses are covered with yellow outer insulation.
- Before disconnecting the SRS wire harness, install the short connector (s) on the airbag (s).
- Replace the entire affected SRS harness assembly if it has an open circuit or damaged wiring.

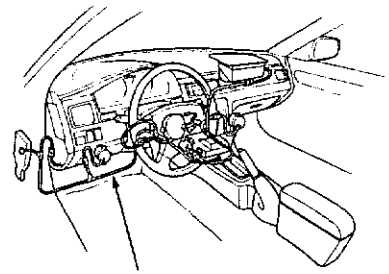

SRS MAIN HARNESS
(Covered with yellow outer insulation)

TURN SIGNAL INDICATOR LIGHTS
(In the gauge assembly)
Bulb Locations, page 23-135

COMBINATION LIGHT/TURN SIGNAL SWITCH
Test, page 23-182
Replacement, page 23-184

HAZARD WARNING SWITCH
Replacement, page 23-211
Test, page 23-211

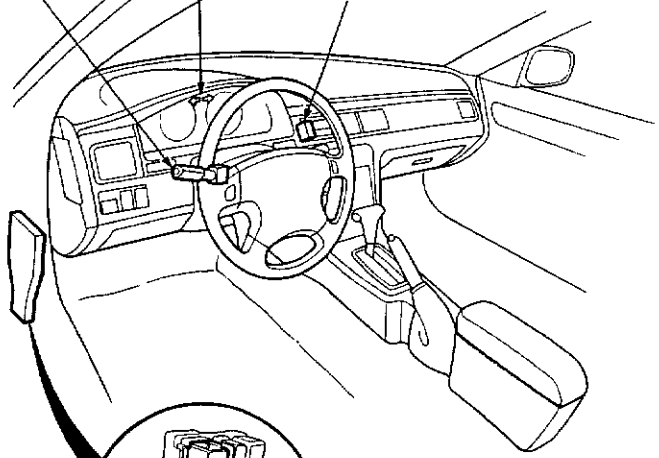

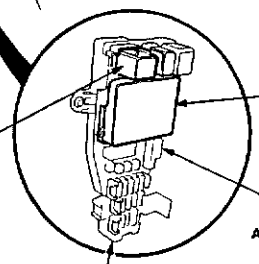

SIDE MARKER FLASHER CIRCUIT
(Built into the integrated control unit)
Input Test, page 23-167

TURN SIGNAL/HAZARD RELAY
Input Test, page 23-210

AUXILIARY FUSE HOLDER

UNDER-DASH FUSE/RELAY BOX

## Circuit Diagram

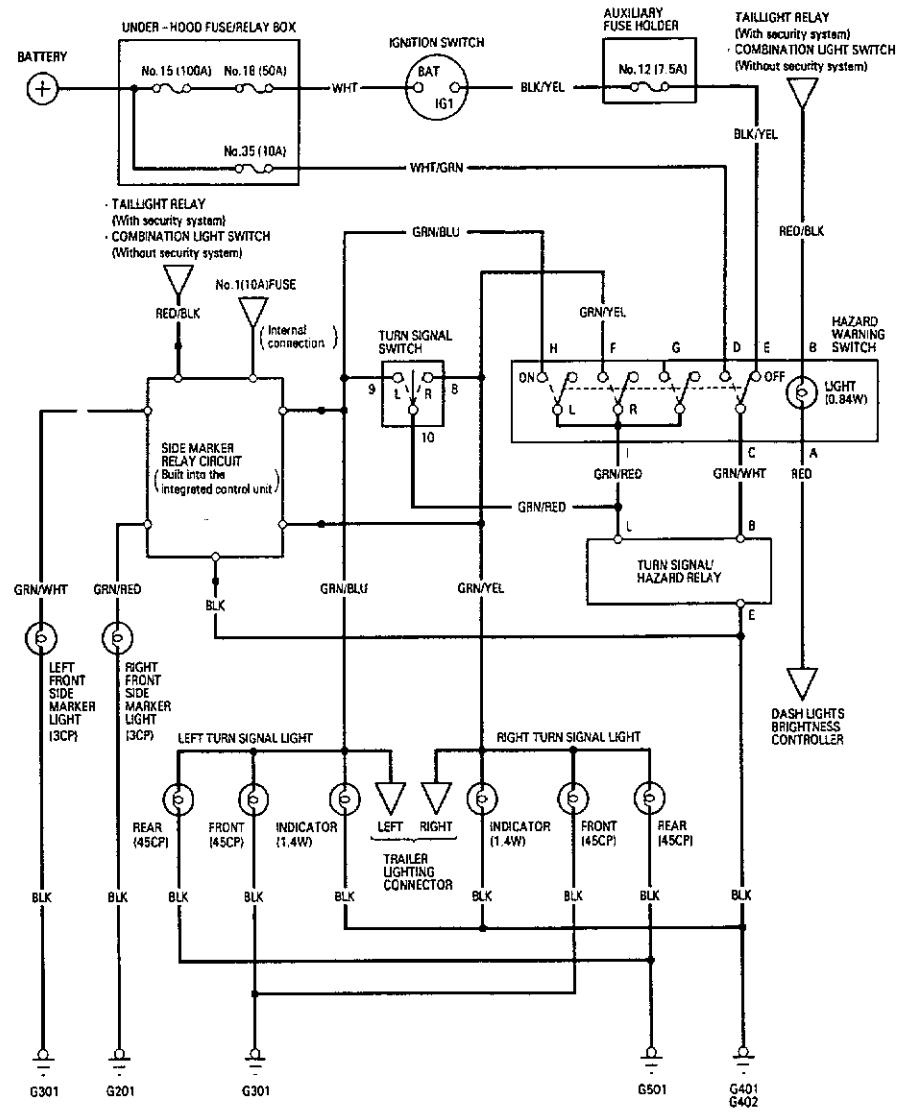

# Side Marker/Turn Signal/Hazard Flasher System

## Turn Signal/Hazard Relay Input Test

CAUTION:
- **All SRS electrical wiring harnesses are covered with yellow outer insulation.**
- **Before disconnecting the SRS wire harness, install the short connector (s) on the airbag (s).**
- **Replace the entire affected SRS harness assembly if it has an open circuit or damaged wiring.**

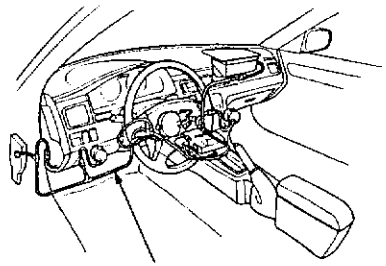


Remove the turn signal/hazard relay from the under-dash fuse/relay box.

Inspect the connector terminals to be sure they are all making good contact.

- If the terminals are bent, loose or corroded, repair them as necessary, and recheck the system.
- If the terminals look OK, make the following input tests at the connector.
  - If any test indicates a problem, find and correct the cause, then recheck the system.
  - If all the input tests prove OK, the turn signal/hazard relay must be faulty; replace it.

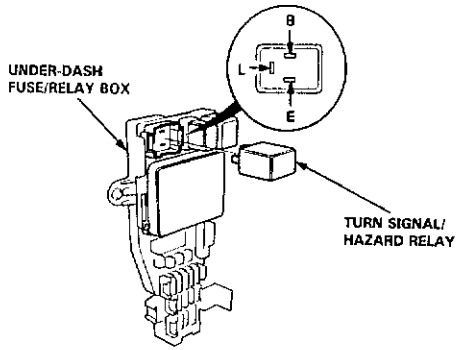


| No. | Terminal | Test condition | Test: Desired result | Possible cause if result is not obtained |
|---|---|---|---|---|
| 1 | E | Under all conditions. | Check for continuity to gound: There should be continuity. | • Poor ground (G401, G402)<br>• An open in the wire. |
| 2 | B | Ignition switch ON. | Check for voltage to ground: There should be battery voltage. | • Blown No.12 (7.5 A) fuse (in the auxiliary fuse holder).<br>• An open in the wire.<br>• Faulty hazard warning switch. |
| | | Hazard warning switch ON | Check for voltage to ground: There should be battery voltage. | • Blown No.35 (10 A) fuse (in the under-hood fuse/relay box).<br>• An open in the wire.<br>• Faulty hazard warning switch. |
| 3 | L | Hazard warning switch ON and connect the B terminal to the L terminal. | Hazard lights should come on. | • Poor ground (G201, G301, G401, G402, G501).<br>• Faulty hazard warning switch.<br>• Faulty side marker relay circuit.<br>• An open in the wire. |
| | | Ignition switch ON and turn signal switch in Right or Left and connect the B terminal to the L terminal. | Right or Left turn signal lights should come on. | • Faulty turn signal switch. |



## Hazard Warning Switch Replacement

**CAUTION: Be careful not to damage the dashboard and dashboard trim panel.**

1. Carefully pry out the dashboard trim panel.
2. Disconnect the connectors.

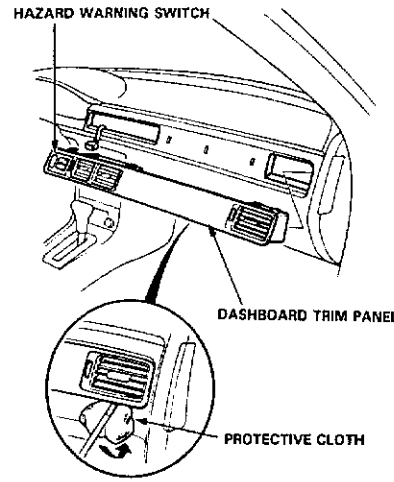


3. Remove the hazard warning switch from the dashboard trim panel.

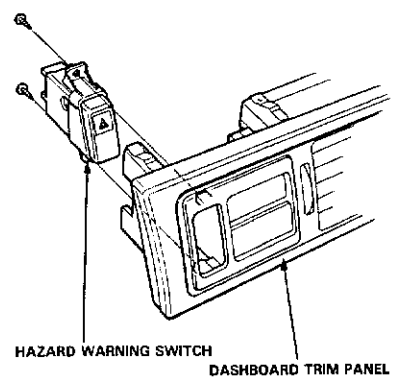


4. Install in the reverse order of removal.

## Hazard Warning Switch Test

1. Remove the hazard warning switch from the dashboard trim panel.
2. Check for continuity between the terminals in each switch position according to the table.

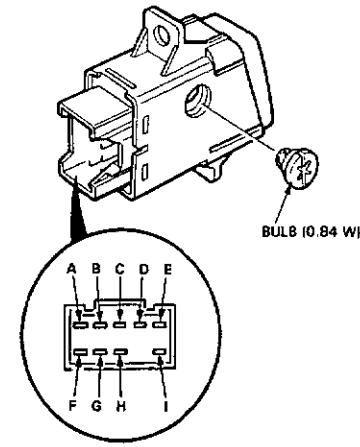


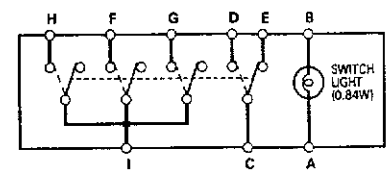


| Terminal / Position | A | | B | C | D | E | F | G | H | I |
|---|---|---|---|---|---|---|---|---|---|---|
| OFF | ○ | ⊗ | ○ | ○ | — | ○ | | | | |
| ON | ○ | ⊗ | ○ | ○ | ○ | | ○ | ○ | ○ | ○ |

## Component Location Index

CAUTION:
- All SRS electrical wiring harnesses are covered with yellow outer insulation.
- Before disconnecting the SRS wire harness, install the short connector (s) on the airbag (s).
- Replace the entire affected SRS harness assembly if it has an open circuit or damaged wiring.

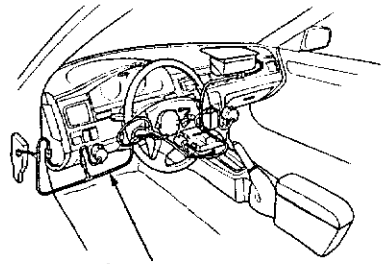


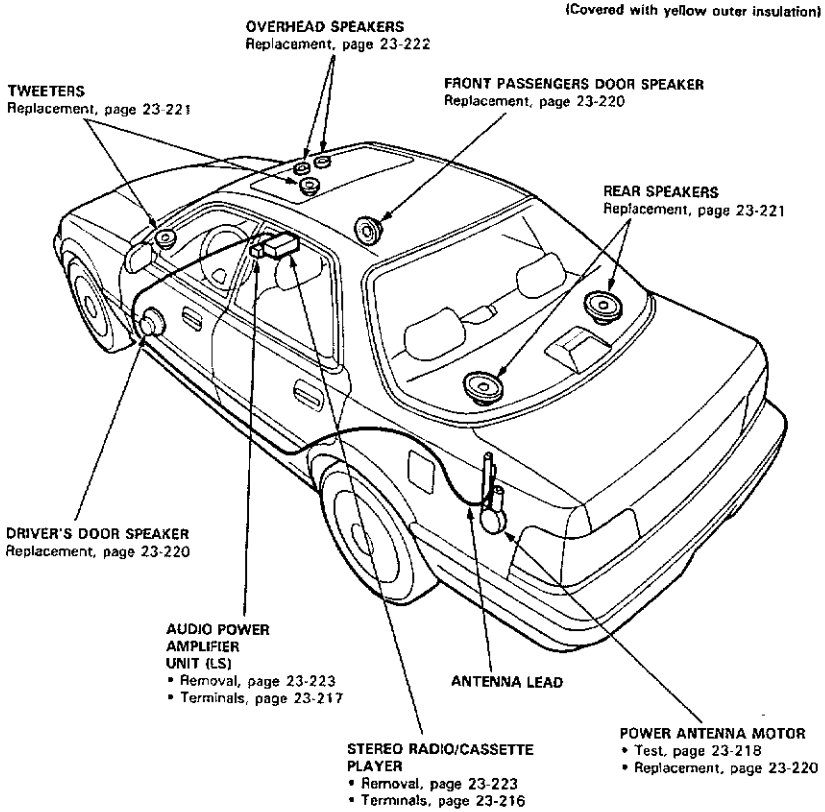




## Description

**DSP System (GS):**
The Digital Signal Processor (DSP) enables you to vary the acoustics in the car according to the style of music you want to listen to. As a result, the sound quality will be improved to such an extent that you'll think you're in a concert hall instead of a car.
During a performance of live music the listener not only hears direct sound, but also reflected sound from the walls and ceiling. This reflected sound and the delay between it and the direct sound reaching the ears, are what gives a live performance greater depth.
As opposed to a conventional car audio system, giving only direct sound with almost no reflection or echo, the DSP reproduces the combination of direct and reflected sound through eight speakers by delaying or reverberating some portions of the source signal.
In order to achieve the most suitable acoustics for the style of music you're listening to, select the DSP mode recommended in the table.

| Style of music | Jazz | Pop | Rock-Classical | Rock | Classical | Easy Listening |
|---|---|---|---|---|---|---|
| DSP mode | 1 CLUB | 2 STUDIO | 3 HALL | 4 ARENA | 5 CATHDRL | 6 DEN |

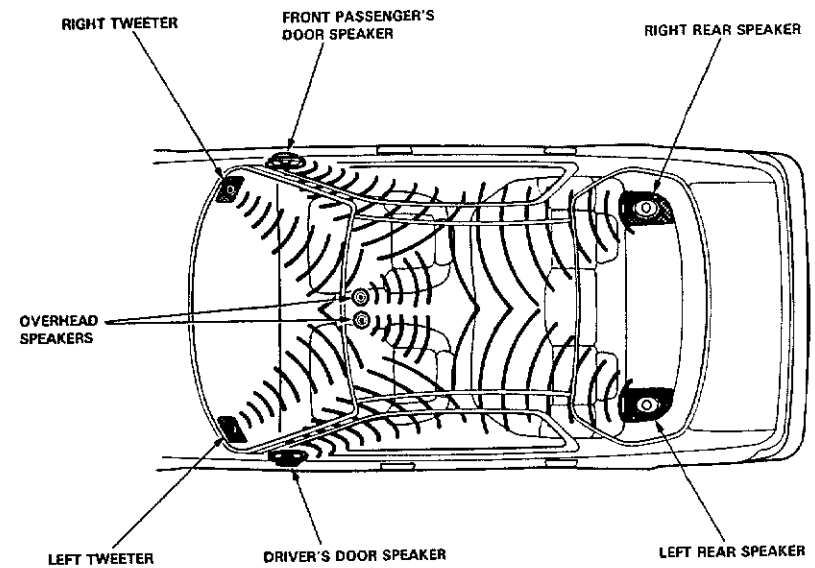

## Circuit Diagram (GS)

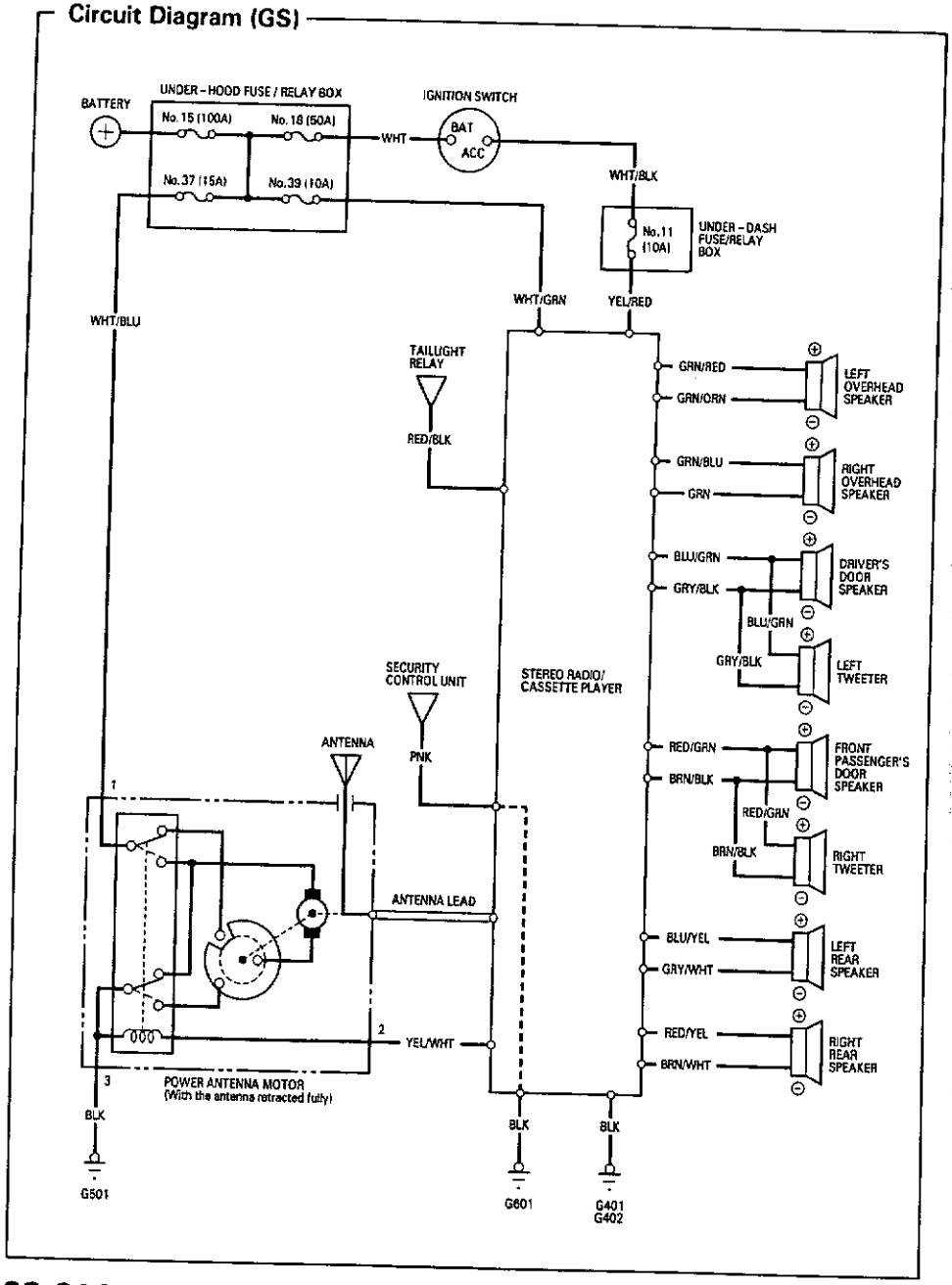




## Circuit Diagram (LS)

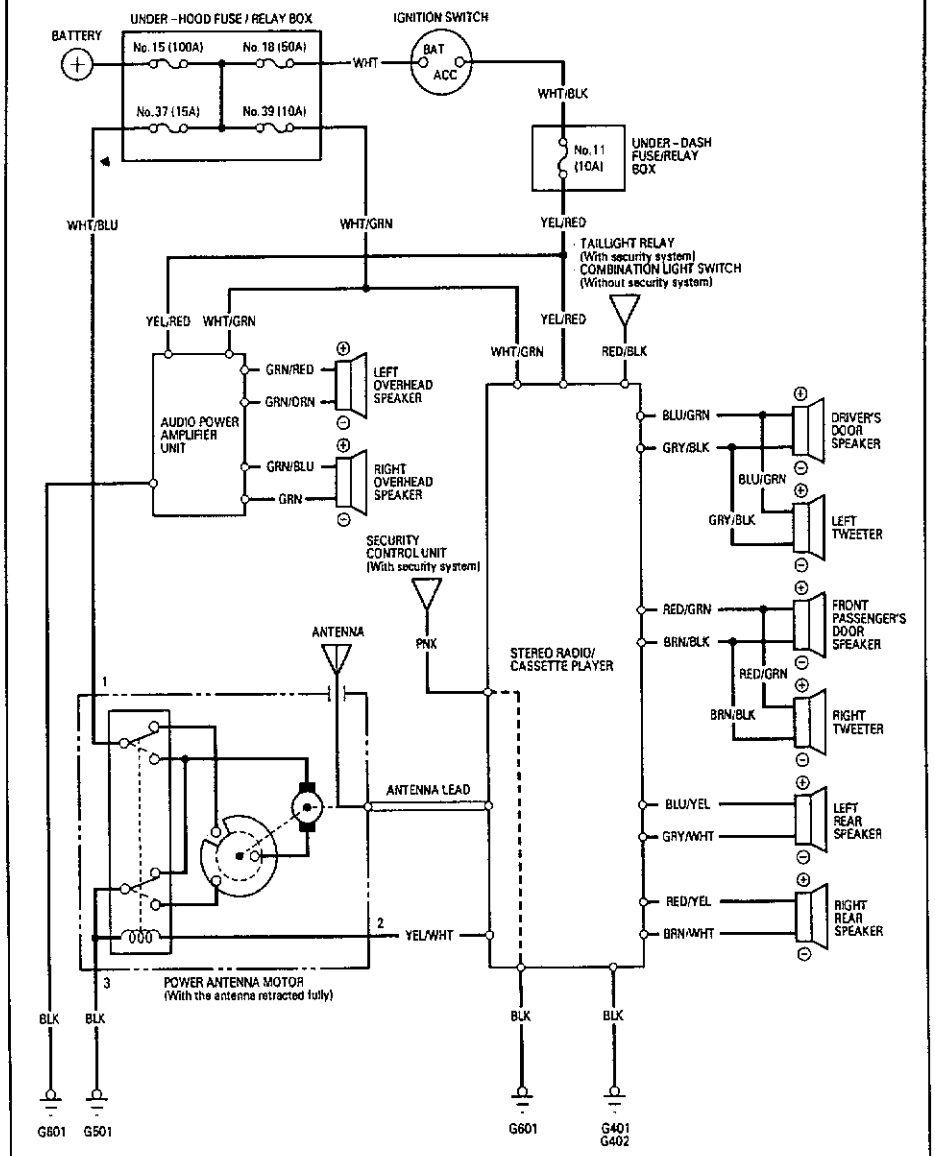

## Stereo Radio/Cassette Player Terminals

GS:

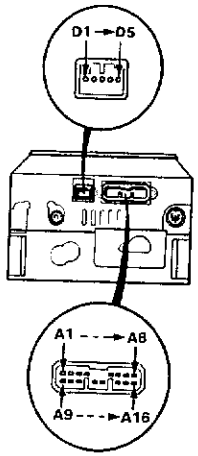


| Terminal | Wire | Destination |
|---|---|---|
| A1 | RED/GRN | Front passenger's door speaker ⊕ |
| A2 | BLU/GRN | Driver's door speaker ⊕ |
| A3 | RED/BLK | Lights on signal |
| A4 | WHT/GRN | Constant power (Tuning memory) |
| A5 | YEL/RED | ACC (Main stereo poer supply) |
| A6 | YEL/WHT | Radio switched power (To antenna) |
| A7 | BLU/YEL | Left rear speaker ⊕ |
| A8 | RED/YEL | Right rear speaker ⊕ |
| A9 | BRN/BLK | Front passenger's door speaker ⊖ |
| A10 | GRY/BLK | Driver's door speaker ⊖ |
| A11 | – | (not used) |
| A12 | PNK | Security (IN) |
| A13 | BLK | Security ground (G601) |
| A14 | BLK | Ground (G401, G402) |
| A15 | GRY/WHT | Left rear speaker ⊖ |
| A16 | BRN/WHT | Right rear speaker ⊖ |

| Terminal | Wire | Destination |
|---|---|---|
| D1 | GRN | Right overhead speaker ⊖ |
| D2 | GRN/BLU | Right overhead speaker ⊕ |
| D3 | GRN/ORN | Left overhead speaker ⊖ |
| D4 | GRN/RED | Left overhead speaker ⊕ |
| D5 | – | (not used) |

LS:

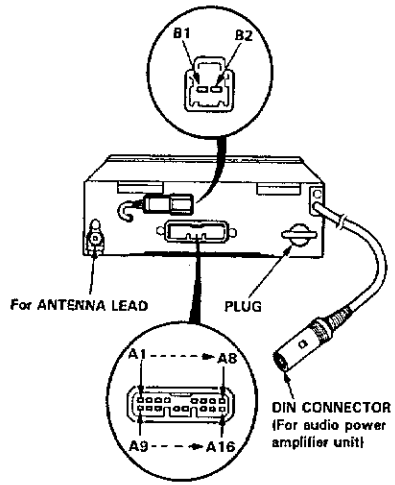


| Terminal | Wire | Destination |
|---|---|---|
| A1 | RED/GRN | Front passenger's door speaker ⊕ |
| A2 | BLU/GRN | Driver's door speaker ⊕ |
| A3 | RED/BLK | Lights on signal |
| A4 | WHT/GRN | Constant power (Tuning memory) |
| A5 | YEL/RED | ACC (Main stereo power supply) |
| A6 | YEL/WHT | Radio switched power (To antenna) |
| A7 | BLU/YEL | Left rear speaker ⊕ |
| A8 | RED/YEL | Right rear speaker ⊕ |
| A9 | BRN/BLK | Front passenger's door speaker ⊖ |
| A10 | GRY/BLK | Driver's door speaker ⊖ |
| A11 | – | (not used) |
| A12 | – | (not used) |
| A13 | – | (not used) |
| A14 | BLK | Ground (G401, G402) |
| A15 | GRY/WHT | Left rear speaker ⊖ |
| A16 | BRN/WHT | Right rear speaker ⊖ |

| Terminal | Wire | Destination |
|---|---|---|
| B1 | PNK | Security (IN) |
| B2 | BLK | Security ground (G601) |



## Audio Power Amplifier Terminals

LS:

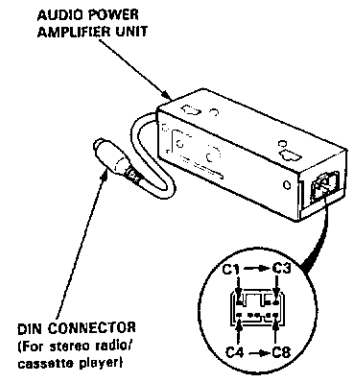


| Terminal | Wire | Destination |
|---|---|---|
| C1 | WHT/GRN | Constant power |
| C2 | GRN/BLU | Right overhead speaker ⊕ |
| C3 | GRN/RED | Left overhead speaker ⊖ |
| C4 | YEL/RED | ACC |
| C5 | – | (not used) |
| C6 | BLK | Ground (G601) |
| C7 | GRN | Right overhead speaker ⊖ |
| C8 | GRN/ORN | Left overhead speaker ⊖ |

## Power Antenna Motor Test

1. Remove the trunk side trim panel.
2. Disconnect the 3-P connector from the motor and remove the connector from its clamp.
3. First check power to the motor at the connector terminals:
   - There should be battery voltage between the WHT/BLU (+) and BLK (−) terminals all the time
   - There should be battery voltage between the YEL/WHT (+) and BLK (−) terminals only with the ignition and radio switched ON.
4. Test motor operation:

EXTEND: Connect battery power to the No.1 and No.2 terminals and ground the No.3 terminal.

RETRACT: Then disconnect power from the No.2 terminal.

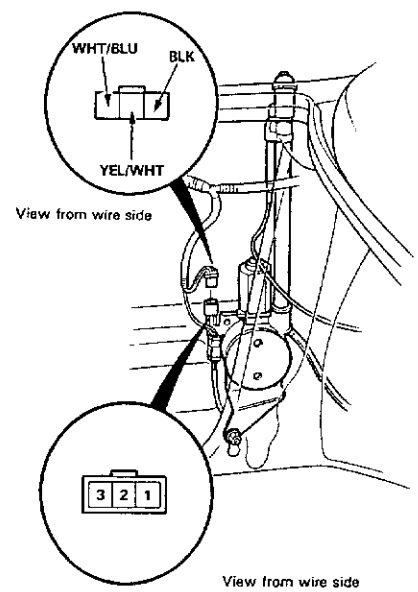


5. If the motor fails to run or does not run smoothly, replace it.

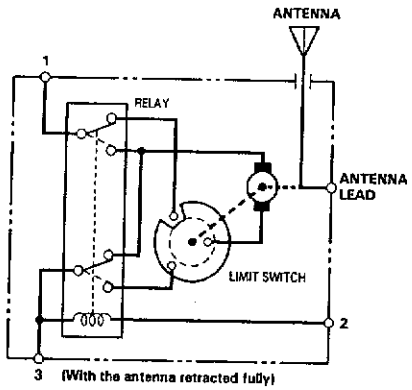


**Sticking Antenna:**
The antenna sticks in either the up or down position.

1. Using the antenna wrench, remove the antenna nut, spacer, and bushing (see page 23-219).
2. Clean the antenna mast housing threads and reinstall the spacer and bushing.

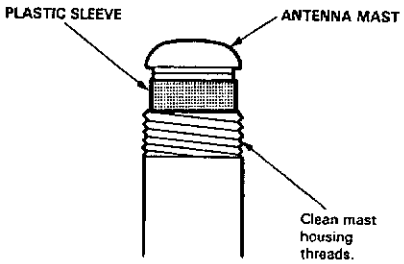


3. Use the antenna nut wrench and tighten the antenna nut to 2.3N·m (0.23kg-m, 1.7lb-ft). If you overtightened the nut, the antenna may stick. If sticking occurs, back the nut off a little, then turn the radio on and off to raise and lower the antenna again. Repeat until the antenna moves freely.



## Antenna Mast Replacement

**Removal**
NOTE: The antenna mast alone can be replaced without having to remove the power antenna motor.

1. Remove the antenna nut, spacer and bushing.
2. Carefully withdraw the antenna mast while extending it by turning the radio switch ON.

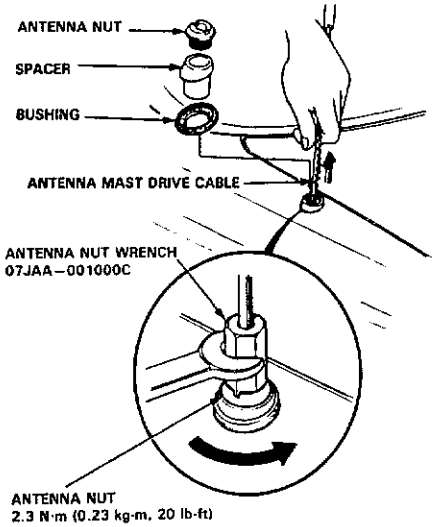


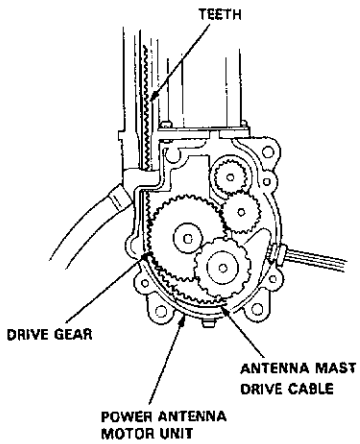


**Installation**
1. Hold the antenna so the teeth on the drive cable face in the direction shown, then insert the cable into the antenna housing.

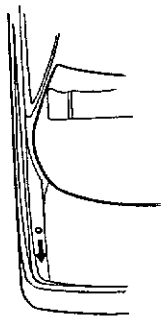


2. Check for engagement of the cable teeth with the drive gear by carefully moving the cable up and down.
3. Turn the radio switch "OFF", and let the motor pull the drive cable into the antenna housing.
4. Clean the antenna housing threads then insert the antenna into the housing. Install the bushing spacer, and install and tighten the antenna nut to 2.3 N·m (0.23 kg-m, 1.7 lb-ft).
5. Check that the antenna mast retracts and extends fully when the radio switch is turned ON and OFF repeatedly. If you overtightened the nut, the antenna may stick. If sticking occurs, back the nut off a little, then raise and lower the antenna again. Repeat until the antenna moves freely.

## Power Antenna Motor Replacement

1. Remove the trunk side trim panel.
2. Disconnect the 3-P connector and antenna lead from the motor, then remove the antenna nut and motor bracket nut.

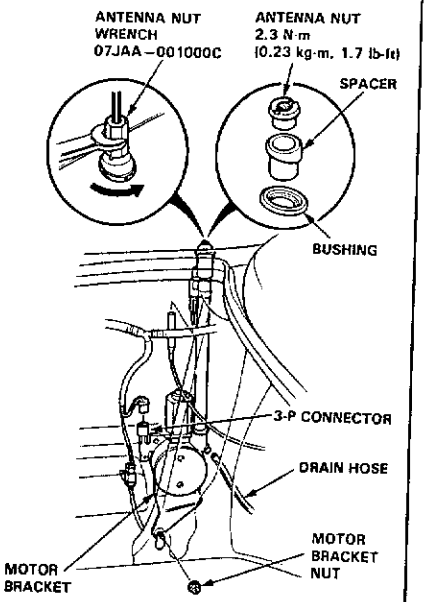


3. Remove the motor and antenna as an assembly.
4. Install in the reverse order of removal.

NOTE: Tighten the antenna nut, then tighten the motor bracket nut.

## Door Speaker Replacement

1. Remove the door panel.
2. Remove the three screws, then disconnect the 2-P connector from the speaker.

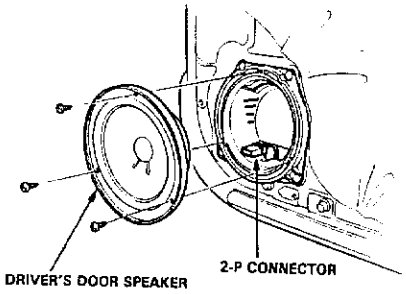


3. Install in the reverse order of removal.



## Rear Speaker Replacement

1. Remove the three screws from the trunk side, then remove the speaker cover.
2. Remove the four screws, then disconnect the connector from the speaker and remove the speaker.

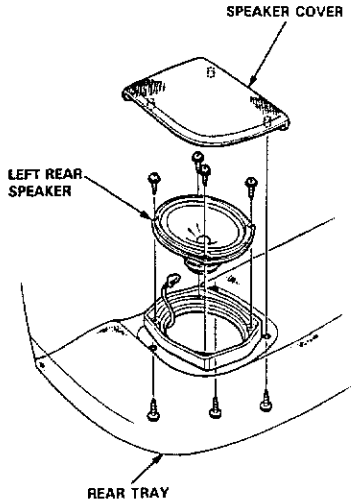


3. Install in the reverse order of removal.

## Tweeter Replacement

1. Carefully pry the tweeter out of the dashboard, then disconnect the 2-P connector from the speaker.

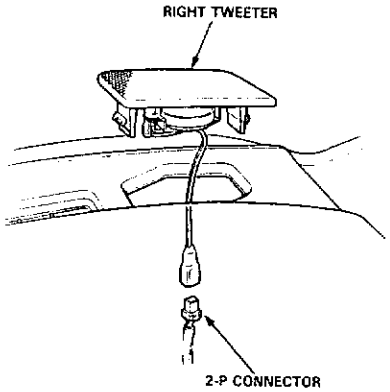


2. Install in the reverse order of removal.

## Overhead Speaker Replacement

1. Turn the ceiling light switch OFF.
2. Pry off the lens.
3. Remove the bolt and the housing.
4. Disconnect the 4 P connector from the housing.

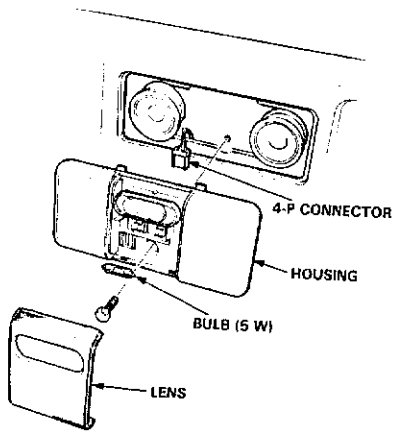


5. Remove the two screws, then disconnect the 2-P connectors from the wire harness.

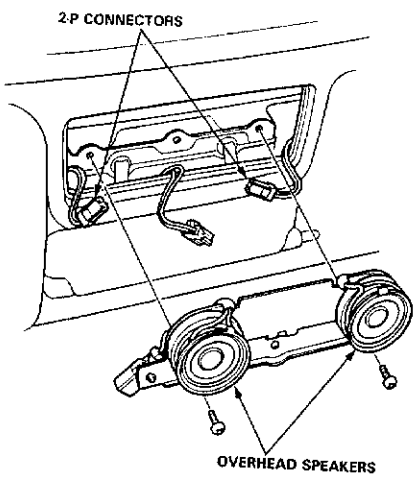


6. Disconnect the wires from the overhead speaker, then remove the screw.

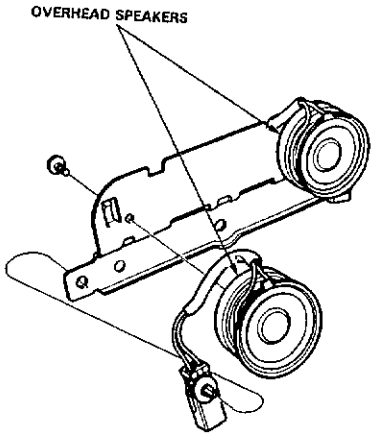


7. Install in the reverse order of removal.



## Unit Removal

**CAUTION:**
- **All SRS electrical wiring harnesses are covered with yellow outer insulation.**
- **Before disconnecting the SRS wire harness, install the short connector (s) on the airbag (s).**
- **Replace the entire affected SRS harness assembly if it has an open circuit or damaged wiring.**

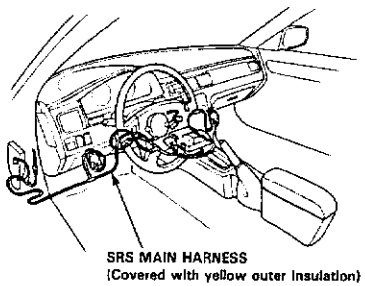


NOTE: The radio may have a coded theft protection circuit. Be sure to get the customer's code number before
- Disconnecting the battery.
- Removing the No. 39 (10 A) fuse in the underhood fuse/relay box.
- Removing the radio.

After service, reconnect power to the radio and turn it on. When the word "CODE" is displayed, enter the customer's 5-digit code to restore radio operation.

1. Remove the center console (see section 20).
2. Remove the heater control panel and the ashtray, then remove the four screws.

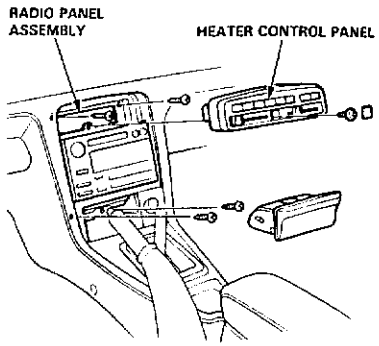


3. Disconnect the connectors and antenna lead, then take out the radio panel assembly.
4. Remove the two screws, then disconnect the audio power amplifier unit (LS).

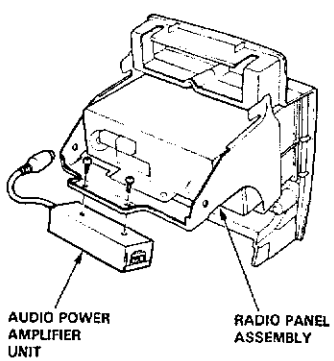


5. Install in the reverse order of removal.

## Component Location Index

CAUTION:
- All SRS electrical wiring harnesses are covered with yellow outer insulation.
- Before disconnecting the SRS wire harness, install the short connector (s) on the airbag (s).
- Replace the entire affected SRS harness assembly if it has an open circuit or damaged wiring.

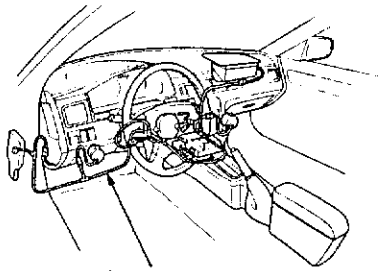

SRS MAIN HARNESS
(Covered with yellow outer insulation)

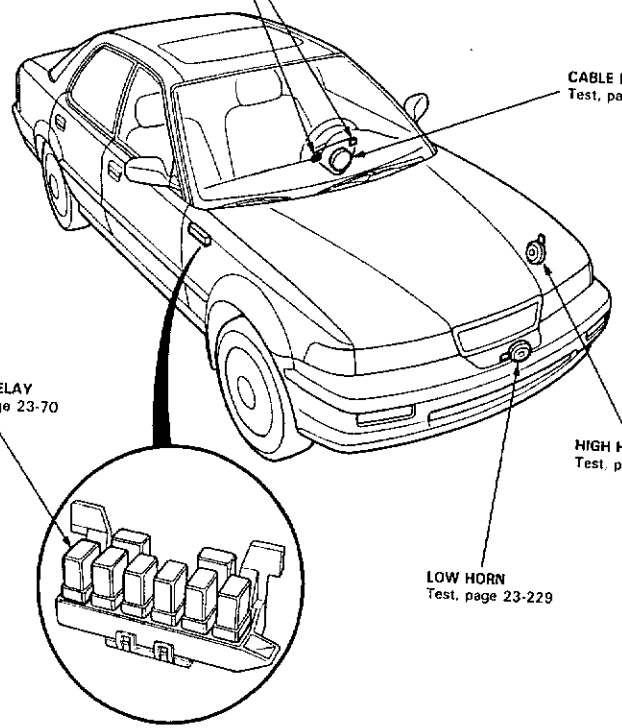




## Circuit Diagram

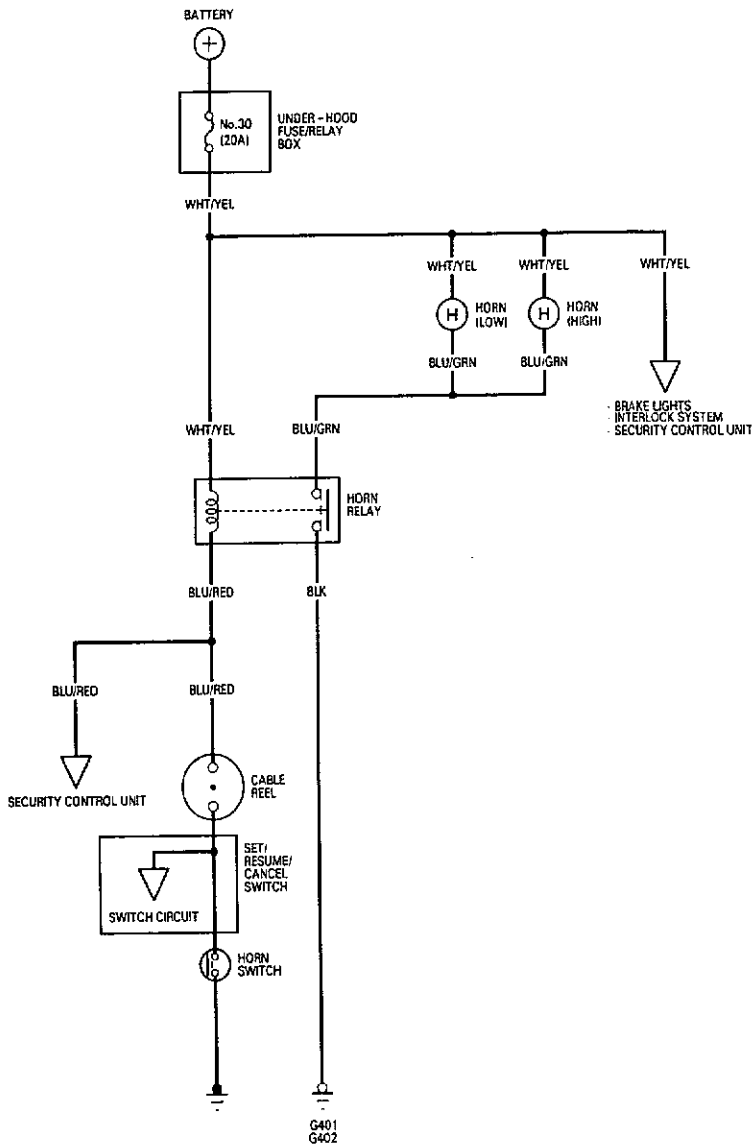

## Switch Test

CAUTION:
- **All SRS electrical wiring harnesses are covered with yellow outer insulation.**
- **Before disconnecting the SRS wire harness, install the short connector (s) on the airbag (s).**
- **Replace the entire affected SRS harness assembly if it has an open circuit or damaged wiring.**

NOTE: The radio may have a coded theft protection circuit. Be sure to get the customer's code number before
- Disconnecting the battery.
- Removing the No. 39 (10 A) fuse in the underhood fuse/relay box.
- Removing the radio.

After service, reconnect power to the radio and turn it on. When the word "CODE" is displayed, enter the customer's 5-digit code to restore radio operation.

1. Disconnect the battery negative cable, then disconnect the positive cable.

2. Install short connectors on the airbag (s):

   Driver's side:
   - Remove the access panel from the steering wheel, then remove the short connector (RED) from the panel.
   - Disconnect the connector between the driver's airbag and cable reel, then install the short connector (RED) on the airbag side of the connector.

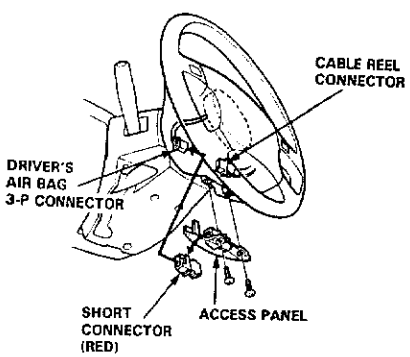


   Passenger's side:
   - Remove the glove box.

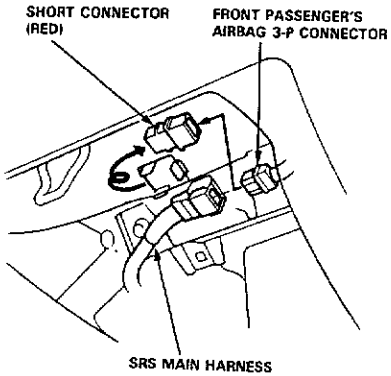


   - Disconnect the connector between the front passenger's airbag and the SRS main harness, then install the short connector (RED) on the airbag side of the connector.



3. Disconnect the cable reel and the SRS main harness 6-P connector, and connect Test Harness C only to the cable reel side of the connector.

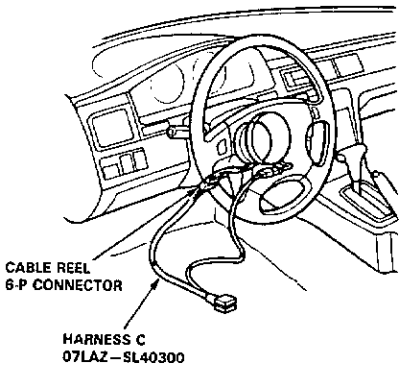


4. Check for continuity between the No.3 terminal and body ground with the horn switch pressed. There should be continuity.

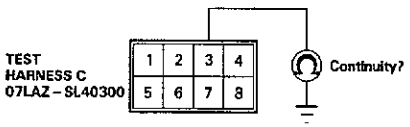


- If there is continuity, the horn switch is OK.
- If there is no continuity, go to step 5.

5. Remove the two TORX® bolts using a TORX® T30 bit, then remove the driver's airbag assembly.

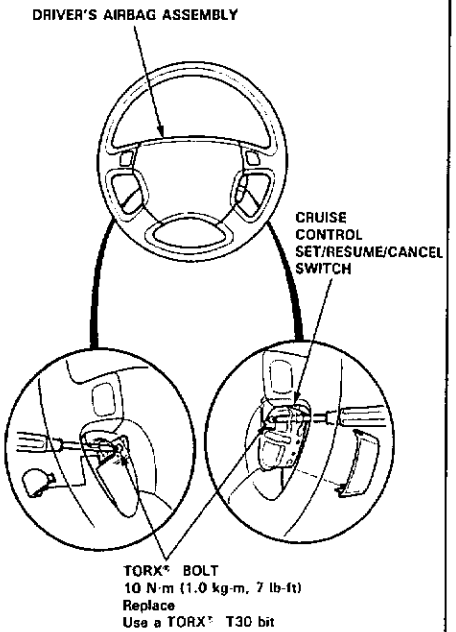


(cont'd)

## Switch Test (cont'd)

6. Check for continuity between the horn positive terminal and the steering column shaft with the horn switch pressed.
   There should be continuity.

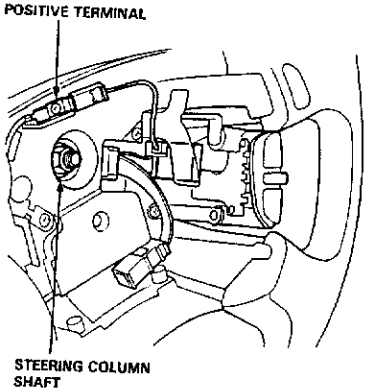


- If there is continuity.
  - Test the set/resume/cancel switch (see page 23-299 ).
    If the switch is OK, replace the cable reel.
- If there is no continuity, remove the nut and four screws. Then remove the steering wheel. Remove the cover from the back of the steering wheel and replace the horn switch.

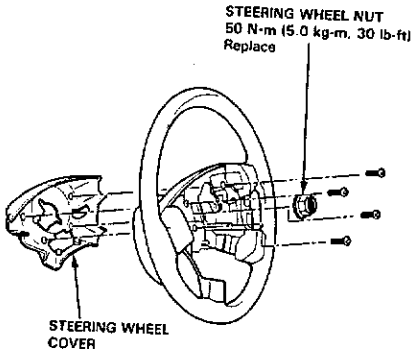


7. Reinstall the steering wheel (see section 17).



## Horn Test

1. Disconnect the 2-P connector from the horn.
2. Remove the low and high horns.

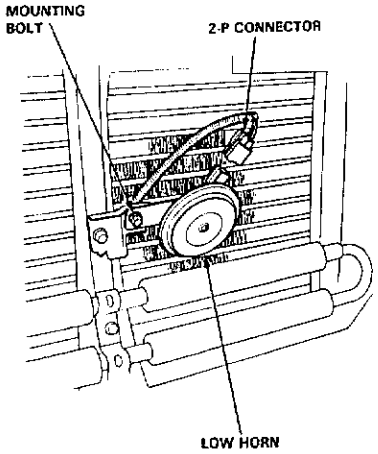


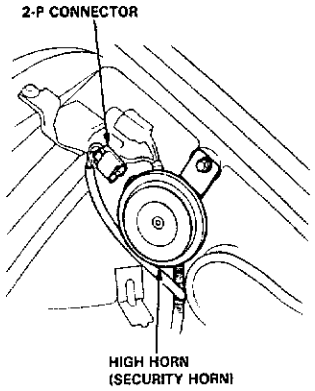


3. Test the horn by connecting battery power to one terminal and grounding the other. The horn should sound.

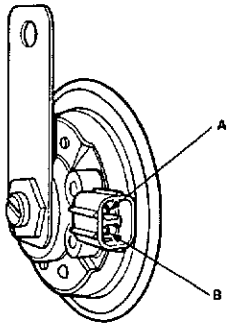


4. Replace the horn if it fails to sound.

## Circuit Diagram

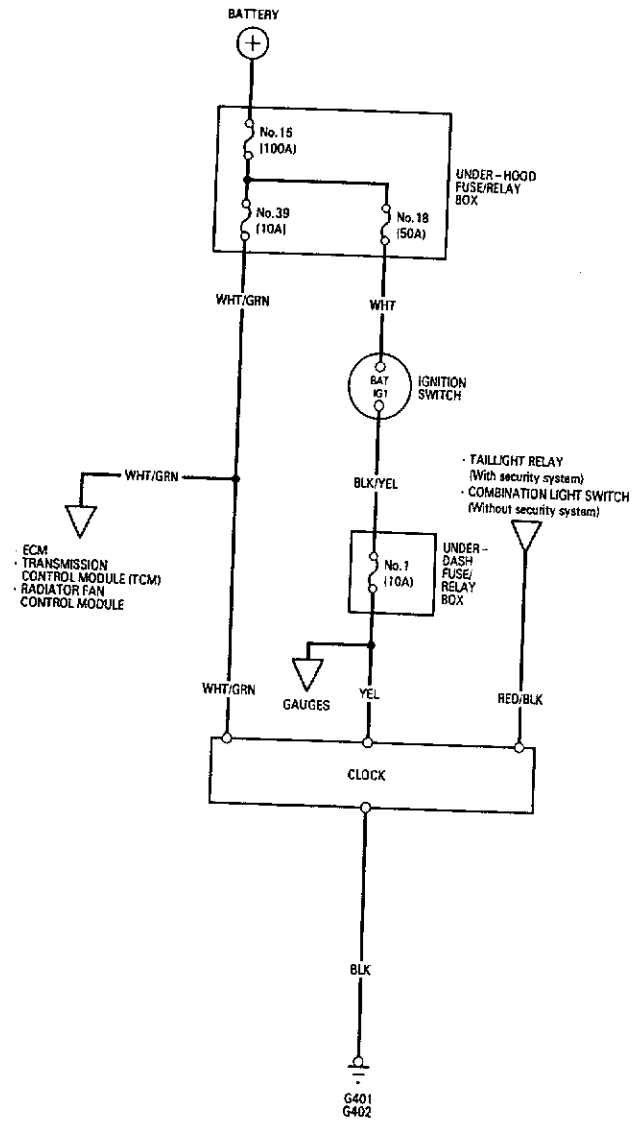




## Replacement

**CAUTION: Be careful not to damage the dashboard and dashboard trim panel.**

1. Pry out the dashboard trim panel.

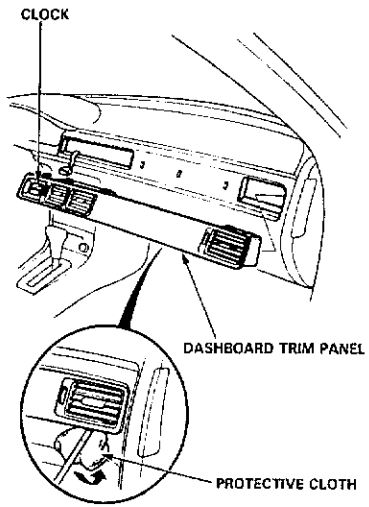


2. Remove the clock from the dashboard trim panel.

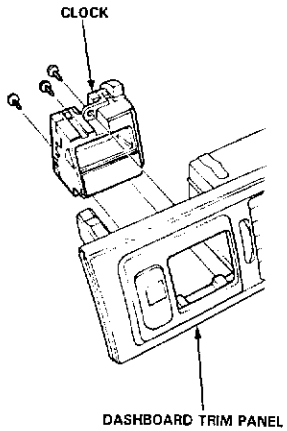


## Terminals

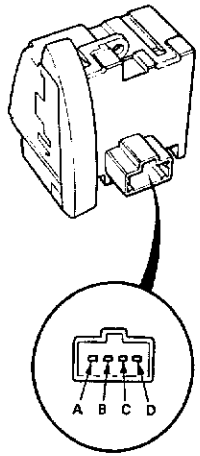


| Terminal | Wire | Destination |
|---|---|---|
| A | WHT/GRN | Constant power (Time memory) |
| B | YEL | IG1 (Main clock power supply) |
| C | RED/BLK | Lights-on signal |
| D | BLK | Ground |

## Component Location Index

CAUTION:
- All SRS electrical wiring harnesses are covered with yellow outer insulation.
- Before disconnecting the SRS wire harness, install the short connector (s) on the airbag (s).
- Replace the entire affected SRS harness assembly if it has an open circuit or damaged wiring.

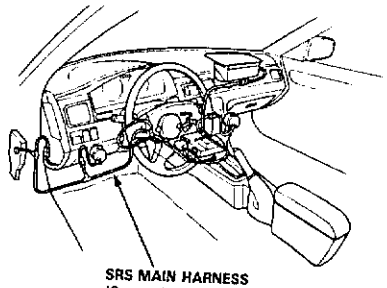

SRS MAIN HARNESS
(Covered with yellow outer insulation)

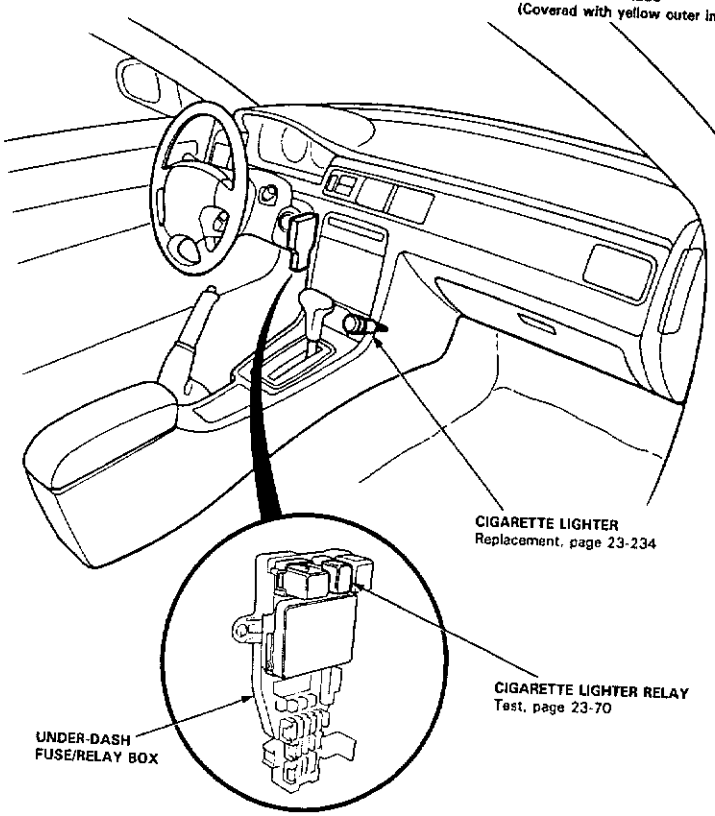

CIGARETTE LIGHTER
Replacement, page 23-234

CIGARETTE LIGHTER RELAY
Test, page 23-70

UNDER-DASH
FUSE/RELAY BOX



## Circuit Diagram

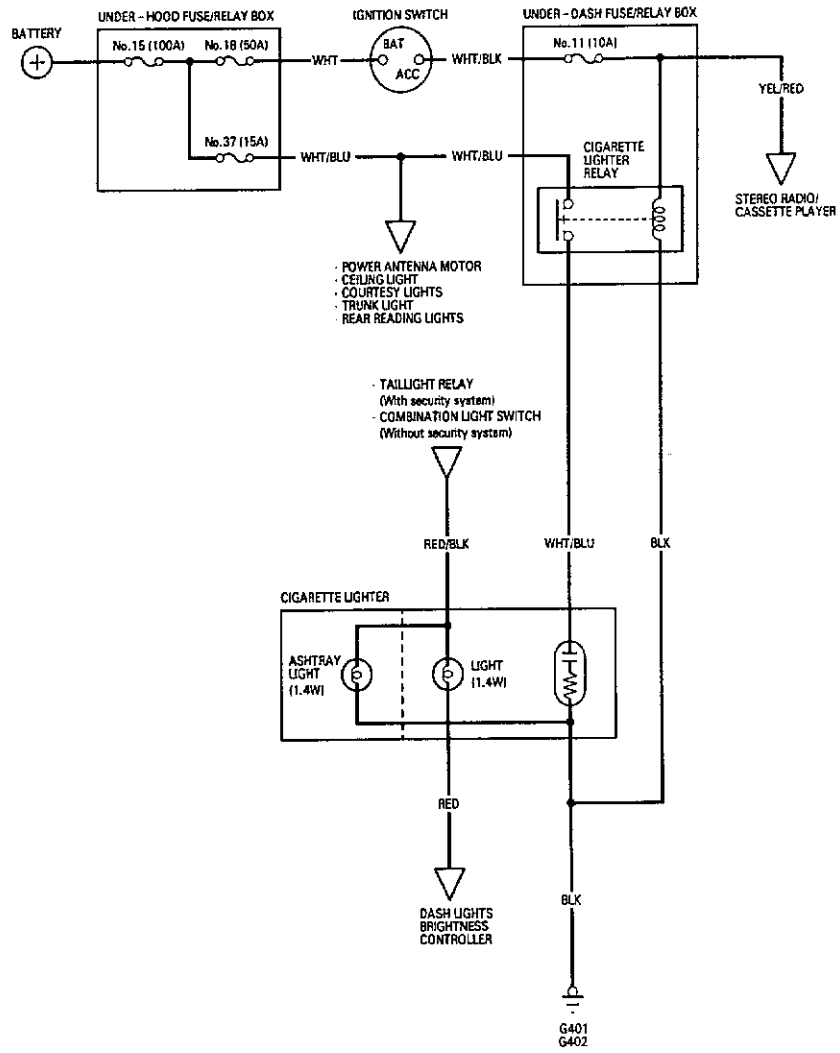

## Replacement

CAUTION:
- All SRS electrical wiring harnesses are covered with yellow outer insulation.
- Before disconnecting the SRS wire harness, install the short connector (s) on the airbag (s).
- Replace the entire affected SRS harness assembly if it has an open circuit or damaged wiring.

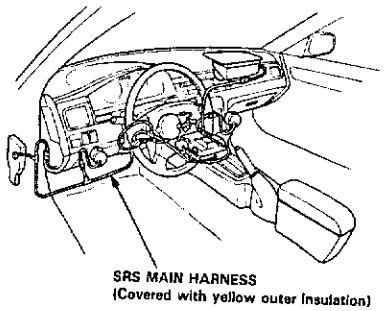


NOTE: The radio may have a coded theft protection circuit. Be sure to get the customer's code number before
– Disconnecting the battery.
– Removing the No. 39 (10 A) fuse in the underhood fuse/relay box.
– Removing the radio.
After service, reconnect power to the radio and turn it on. When the word "CODE" is displayed, enter the customer's 5-digit code to restore radio operation.

1. Remove the center console (see section 20).
2. Remove the heater control panel and radio panel assembly (see page 23-223 ).
3. Disconnect the thermofuse case from the socket end.

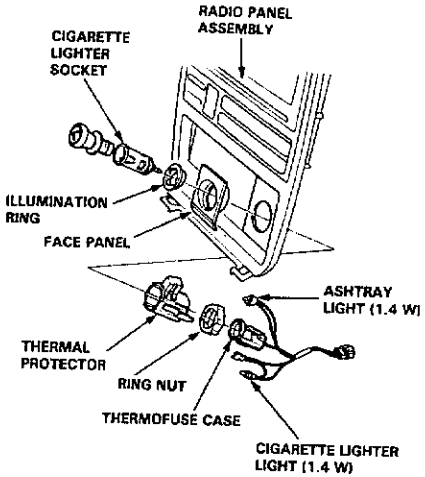


4. Remove the ring nut and separate the cigarette lighter socket from the thermal protector.
5. When installing the cigarette lighter, align each lug on the face panel, illumination ring and cigarette lighter socket with the groove in the hole, then position the bulb housing on the thermal protector between the stops in the radio panel.
6. Make sure that the ground wire, bulb socket and thermo fuse case are seated against the cigarette lighter assembly.





## Component Location Index

CAUTION:
- All SRS electrical wiring harnesses are covered with yellow outer insulation.
- Before disconnecting the SRS wire harness, install the short connector (s) on the airbag (s).
- Replace the entire affected SRS harness assembly if it has an open circuit or damaged wiring.

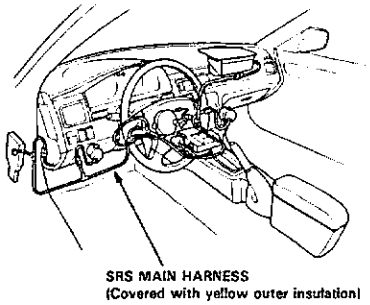


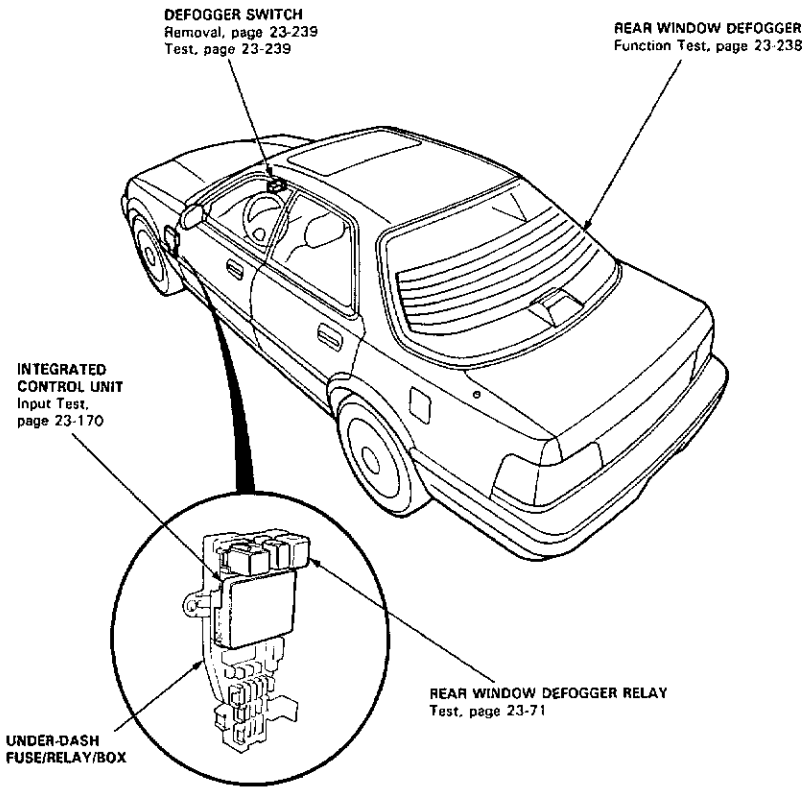

# Rear Window Defogger

## Circuit Diagram

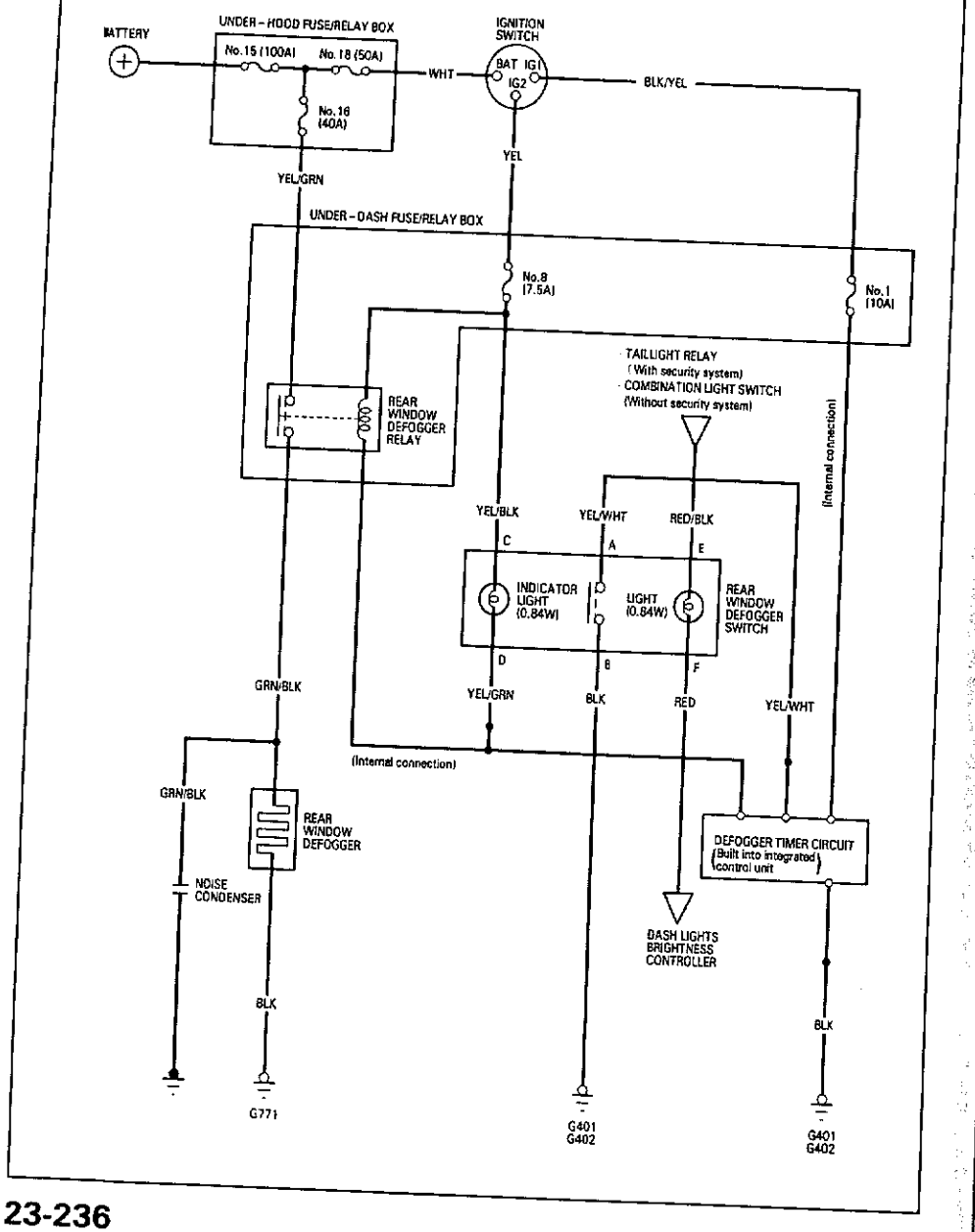




## Troubleshooting

NOTE: The numbers in the table show the troubleshooting sequence.

| Symptom \ Item to be inspected | Blown indicator light bulb | Blown No.8 (7.5 A) fuse (in the under-dash fuse/relay box) | Defogger timer circuit input (in the integrated control unit) | Blown No.1 (10 A) fuse (in the under-dash fuse/relay box) | Blown No.16 (40 A) fuse (in the under-hood fuse/relay box) | Function test | Defogger relay | Defogger switch | Poor ground | Open circuit wires, loose or disconnected terminals |
|---|---|---|---|---|---|---|---|---|---|---|
| Defogger works, but indicator light does not go on. | 1 | | | | | | | | | YEL/BLK |
| Defogger does not work and indicator light does not go on. | | 1 | 3 | 2 | | | | 4 | G401 G402 | YEL, YEL/WHT or YEL/BLK |
| Defogger does not work, but indicator light goes on. | | | | | 1 | 3 | 2 | 4 | G771 | YEL/WHT, YEL/BLK |
| Defogger-on time is too long or too short (normal operation time is 25 minutes). | | | 1 | | | | | | | YEL/WHT or BLK |

## Function Test

**CAUTION: Be careful not to scratch or damage the defogger wires with the tester probe.**

1. Check for voltage between the positive terminal and body ground with the ignition switch and the defogger switch ON.
   There should be battery voltage.
   - If there is no voltage, check for:
     - Faulty defogger relay.
     - Faulty defogger switch.
     - Faulty integrated control unit.
     - An open in the GRN/BLK wire.
   - If there is battery voltage, go to step 2.

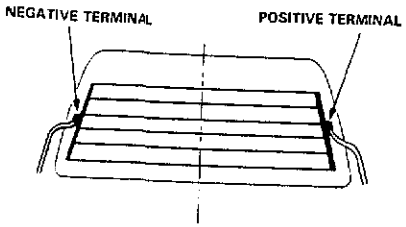


2. Check for continuity between the negative terminal and body ground.
   If no continuity, check for an open in the defogger ground wire.
3. Touch the voltmeter positive probe to the halfway point on each defogger wire, and the negative probe to the negative terminal.
   There should be approximately 6V with the ignition switch and the defogger switch ON.
   - If the voltage is as specified, the defogger wire is OK.
   - If there is battery voltage, the defogger wire is broken on the negative side.
   - If there is no voltage, the defogger wire is broken on the positive side.

## Defogger Wire Repair

NOTE: To make an effective repair, the broken section must be no longer than 25 mm (1.0 in)

1. Lightly rub the area around the break with fine steel wool, then clean it with alcohol.
2. Carefully mask above and below the broken portion of the defogger wire with cellophane tape

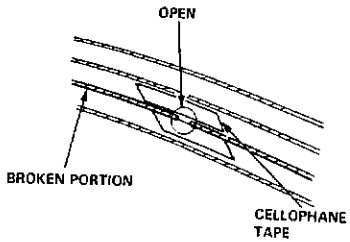


3. Using a small brush, apply a heavy coat of silver conductive paint extending about 3 mm (1/8 in) on both sides of the break. Allow 30 minutes to dry.

   NOTE: Thoroughly mix the paint before use.

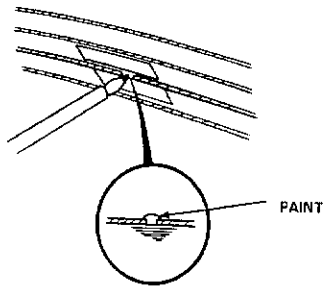


4. Check for proper operation with a voltmeter (half of battery voltage at the halfway-point).
5. Apply a second coat of paint in the same way. Let it dry for three hours before removing the tape.



## Switch Test

1. Remove the rear window defogger switch.
2. Check for continuity between the terminal in each switch position according to the table.

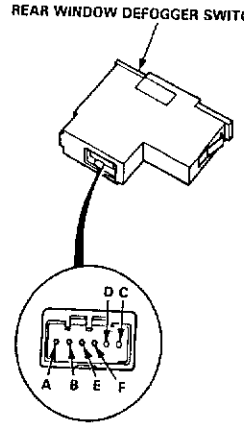


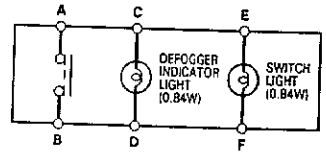


| Position \ Terminal | A | B | C | D | E | F |
|---|---|---|---|---|---|---|
| PUSHED | ○ | ○ | ○ | ○ | ○ | ○ |
| RELEASED | | | ○ | ⊖ | ○ | ○ |

## Switch Removal

NOTE: Be careful not to damage the instrument panel.

1. Carefully pry the switch out of the instrument panel.
2. Disconnect the 6-P connector from the switch

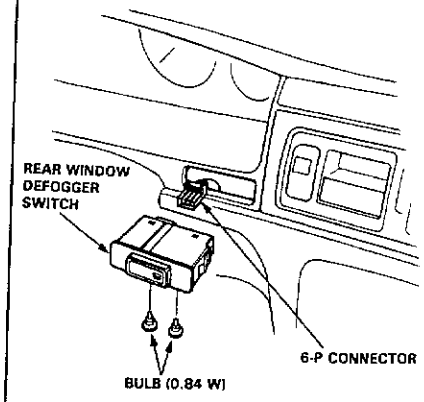


3. Turn the socket 45° counterclockwise to remove either bulb.

## Component Location Index

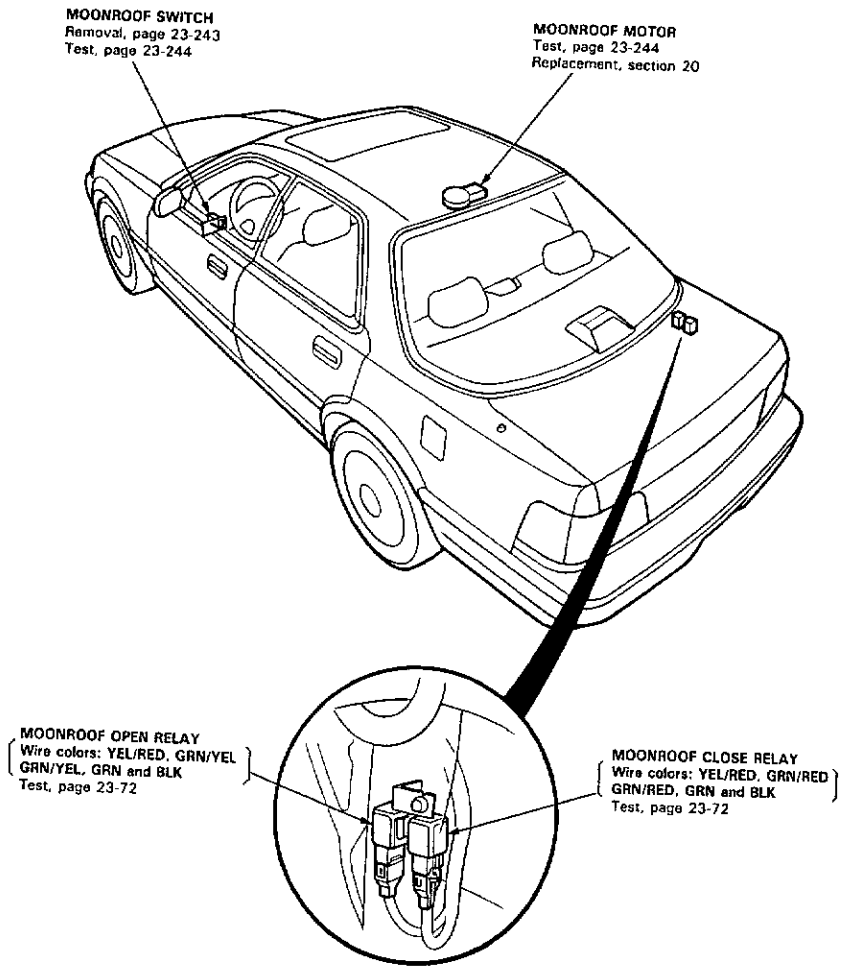




## Circuit Diagram

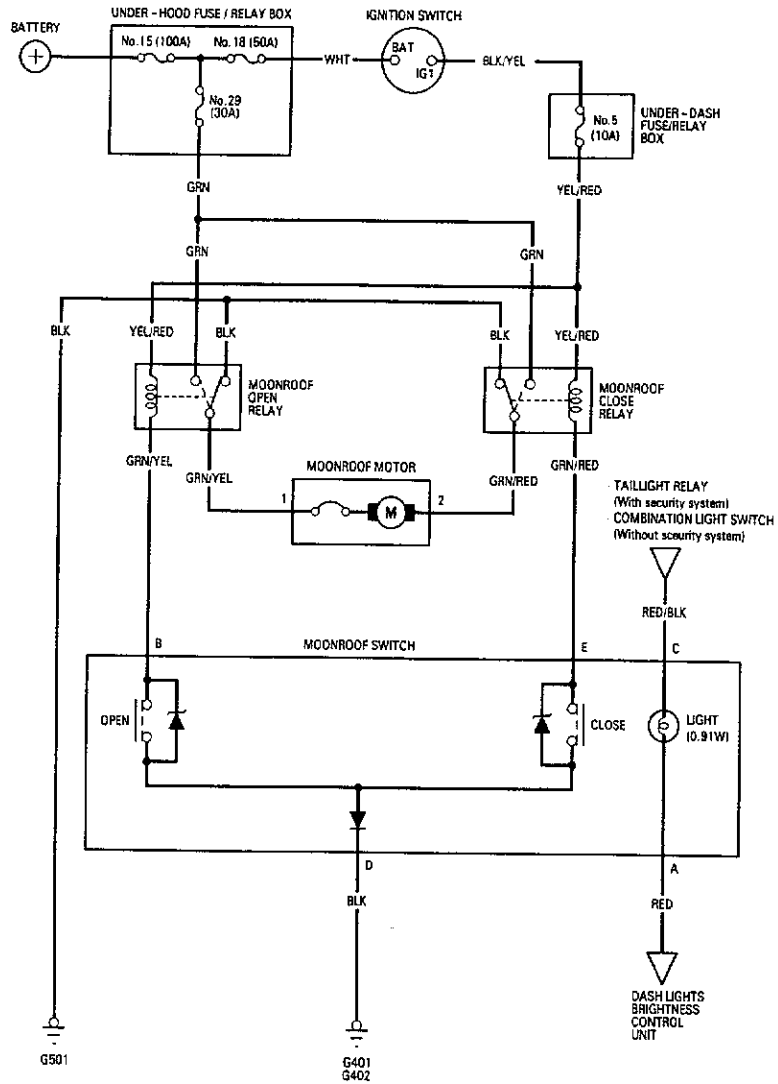

## Troubleshooting

NOTE The numbers in the table show the troubleshooting sequence.

| Symptom \ Item to be inspected | | Clutch out of adjustment, foreign matter stuck between guide rail, moonroof, or outer cable not attached properly. | Blown No. 29 (30 A) fuse (in the under-hood fuse/relay box) | Blown No.5 (10 A) fuse (in the under-dash fuse/relay box) | Function Test | Open relay | Close relay | Moonroof motor | Moonroof switch | Poor ground | Open circuit in wires, loose or disconnected terminals |
|---|---|---|---|---|---|---|---|---|---|---|---|
| Moonroof does not move, but motor turns. | | 1 | | | | | | | | | |
| Moonroof does not move and motor does not turn (moonroof can be moved with moonroof wrench). | With either switch. | | 1 | 2 | 3 | | | 5 | 4 | G401 G402 G501 | GRN, YEL/RED, GRN/YEL or GRN/RED |
| | With OPEN switch. | | | | | 1 | 2 | | 3 | | GRN/YEL or GRN/RED |
| | With CLOSE switch. | | | | | 2 | 1 | | 3 | | GRN/RED or GRN/YEL |



## Function Test

NOTE: Be careful not to damage the switch and the dashboard panel.

1. Carefully pry out the switches from the dashboard.
2. Disconnect the connectors from the switches.

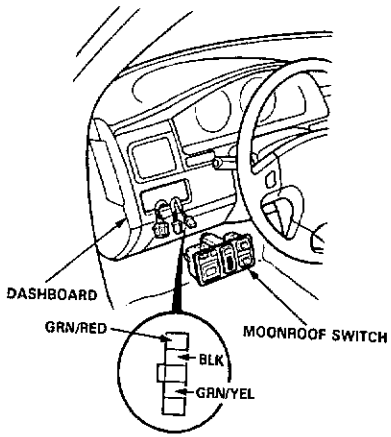


View from wire side

3. Connect the GRN/YEL terminal to body ground with a jumper wire, then turn on the ignition switch. The moonroof should open.
   - If the moonroof opens, check the switch.
   - If not, check for an open in the GRN/YEL wire.
4. Connect the GRN/RED terminal to body ground with a jumper wire, then turn on the ignition switch. The moonroof should close.
   - If the moonroof closes, check the switch.
   - If not, check for open in the GRN/RED wire.
5. Check for continuity to body ground on the BLK wire. There should be continuity.
   - If there is continuity, check the switch.
   - If there is no continuity, check for open in the BLK wire.

## Switch Test

1. Carefully remove the switches from the dashboard.
2. Check for continuity between the terminals in each switch position according to the table.

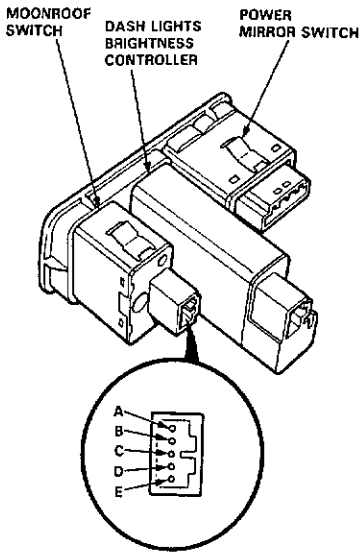


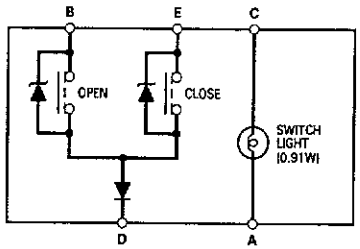


| Position \ Terminal | B | | D | | E | A | | C |
|---|---|---|---|---|---|---|---|---|
| OFF | | | | | | | | |
| OPEN | ○ | ▶ | ○ | | | ○ | ⊖ | ○ |
| CLOSE | | | ○ | ◀ | ○ | | | |

## Motor Test

1. Remove the headliner.
2. Disconnect the 2-P connector from the moonroof motor.
3. Test motor operation by connecting battery power to the No.1 and No.2 terminals. Test the motor in each direction, by switching the leads.
4. If the motor does not run, replace it.

NOTE: See closing force check in section 20 for motor clutch test.

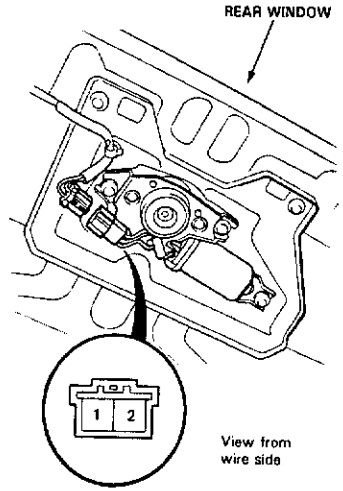






## Component Location Index

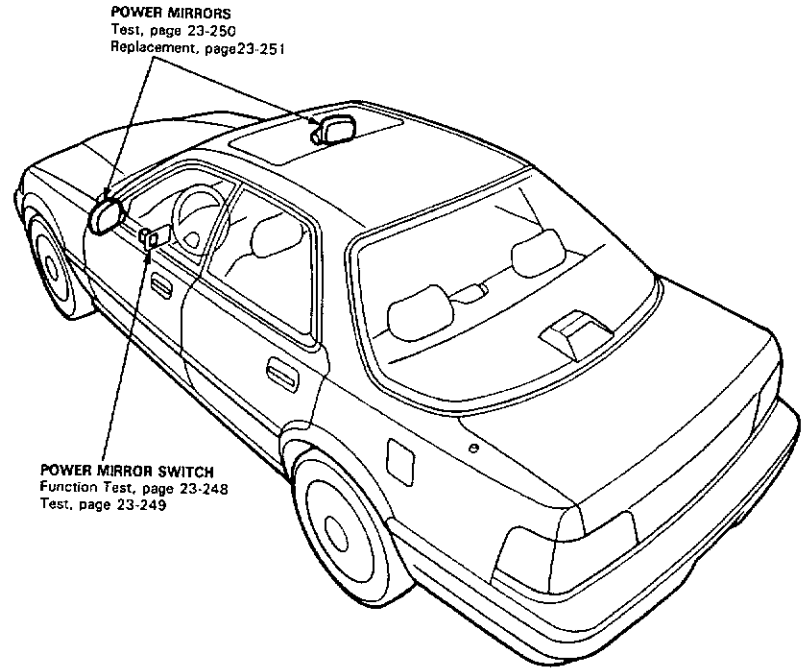

## Circuit Diagram (Without Defogger)

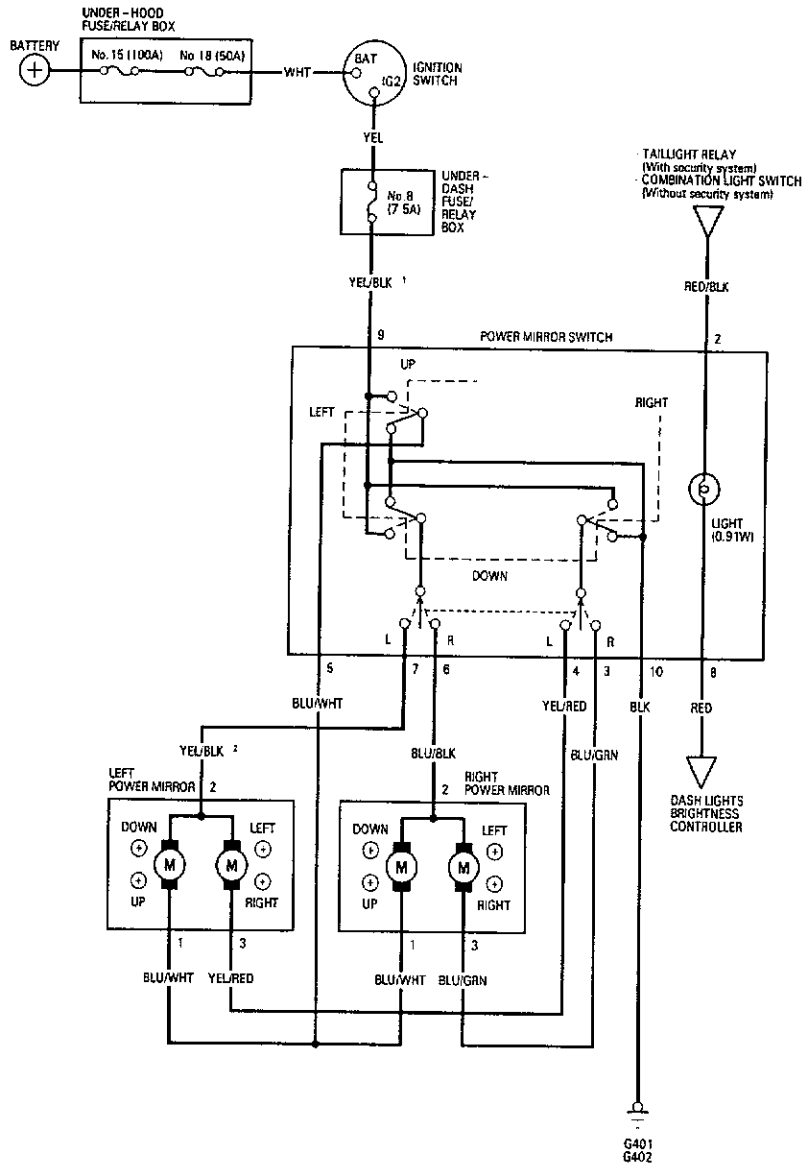


## Circuit Diagram (With Defogger)

• POWER MIRROF DEFOGGER RELAY
Test, page 23 - 71

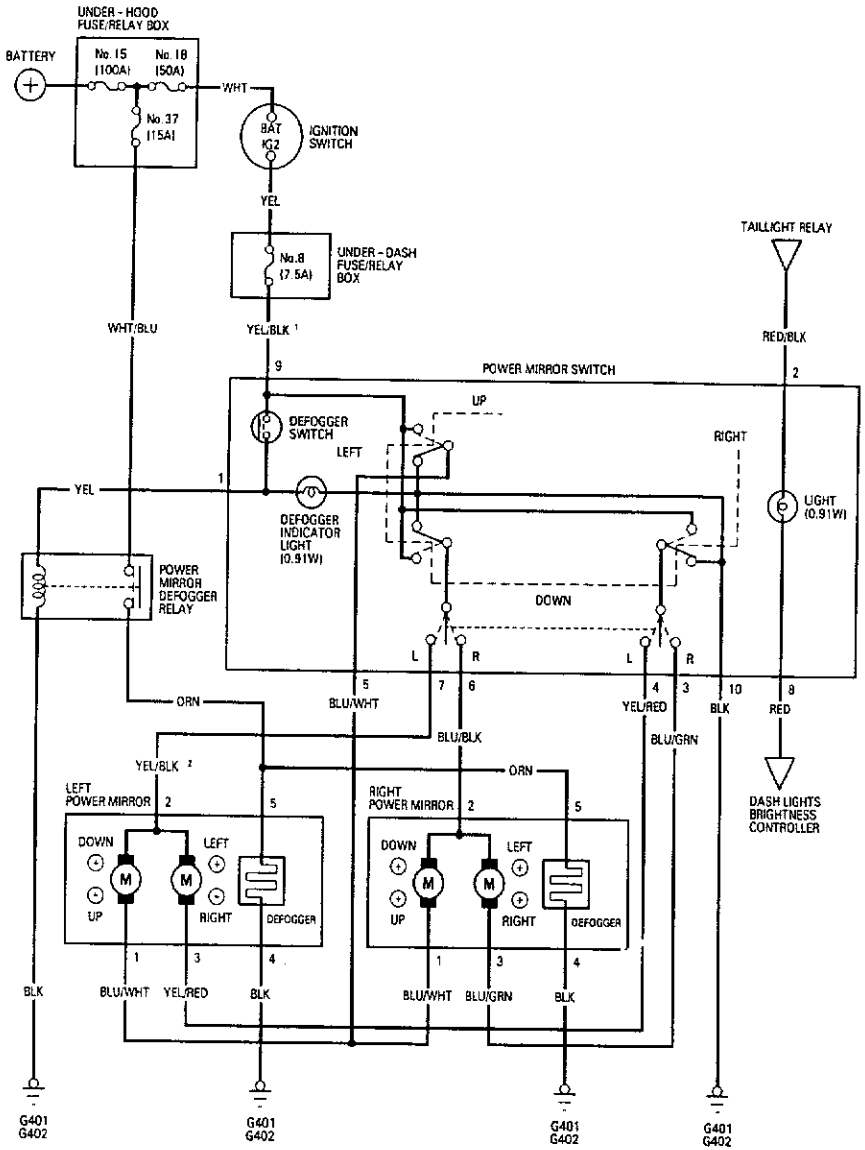

## Function Test

NOTE: Be careful not to damage the switches and the dashboard

1. Carefully pry out the switches from the dashboard.
2. Disconnect the connectors from the switches.

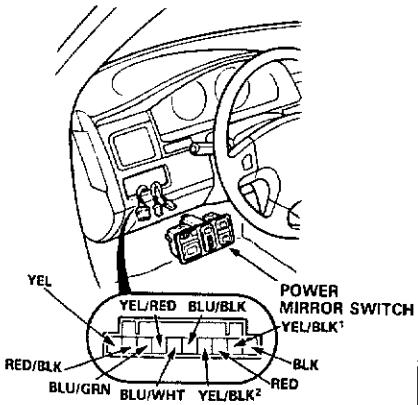

View from wire side.

### Mirror Test

**One or both inoperative:**

1. Check for voltage between the YEL/BLK¹ terminal and body ground with the ignition switch ON. There should be battery voltage.
   - If there is no voltage, check for:
     - Blown No.8 (7.5A) fuse in the under-dash fuse/relay box.
     - An open in the BLK/YEL wire.
   - If there is battery voltage, go to step 2.
2. Check for continuity between the BLK terminal and body ground. There should be continuity.
   - If there is no continuity, check for:
     - An open in the BLK wire.
     - Poor ground (G401,G402).

**Left mirror inoperative:**

Connect the YEL/BLK¹ terminal of the 10-P connector to the YEL/BLK² terminal and the BLU/WHT (or YEL/RED) terminal to body ground with jumper wires. The left mirror should tilt down (or swing left) when the ignition switch is turned ON.

- If the mirror does not tilt down (or does not swing left), remove the left door panel and check for an open in the BLU/WHT (or YEL/RED) wire between the left power mirror and the switch.

If the wire is OK, check the left power mirror motor.

- If the mirror neither tilts down nor swings left, repair the YEL/BLK² wire.
- If the mirror operates properly, check the mirror switch.

**Right mirror inoperative:**

Connect the YEL/BLK¹ terminal of the 10-P connector to the BLU/BLK terminal and the BLU/WHT (or BLU/GRN) terminal to body ground with jumper wires. The right mirror should tilt down (or swing left) when the ignition switch is turned ON.

- If the mirror does not tilt down (or does not swing left), remove the right door panel and check for an open in the BLU/WHT (or BLU/GRN) wire between the right power mirror and the switch.

If the wire is OK, check the right power mirror motor.

- If the mirror neither tilts down nor swings left, repair the BLU/BLK wire.
- If the mirror operates properly, check the mirror switch.

**Defogger test (With defogger)**

1. Connect the YEL/BLK¹ with the YEL terminal of the switch and the YEL terminal of the relay with the BLK terminal by jumper wires. There should be battery voltage when the ignition switch is turned ON.
   - If there is no voltage, check for:
     - An open in the YEL wire.
     - Poor ground (G401, G402).
   - If there is voltage, go to step 2.
2. Connect the WHT/BLU and ORN terminals of the relay with a jumper wire and check for voltage between the WHT/BLU terminal and body ground. There should be battery voltage and both mirrors should warm up with the ignition and defogger switches turned ON.
   - If there is no voltage or neither warms up, check for:
     - An open in the WHT/YEL and ORN wires.
     - Blown No.37 (15A) in the under-hood fuse/relay box.
     - Poor ground (G401, G402).
   - If only one fails to warm up, check its defogger.
   - If both fail to warm up, check the defogger switch and defogger relay.



## Switch Test

1. Remove the switch as described in function test (see page 23-248 ).
2. Check for continuity between the terminals in each switch position according to the table.

**Mirror Switch**

| | Position \ Terminal | 9 | 10 | 5 | 4 | 7 | 3 | 6 |
|---|---|---|---|---|---|---|---|---|
| R | OFF | | ○ | ○ | | | ○ | ○ |
| R | UP | ○ | | ○ | | | | |
| | | | ○ | | | | ○ | ○ |
| R | DOWN | ○ | | | | | ○ | ○ |
| | | | ○ | ○ | | | | |
| R | LEFT | ○ | | ○ | | | | ○ |
| | | | ○ | | | | ○ | |
| R | RIGHT | ○ | | | | | ○ | |
| | | | ○ | ○ | | | | ○ |
| L | OFF | | ○ | ○ | ○ | ○ | | |
| L | UP | ○ | | ○ | | | | |
| | | | ○ | | ○ | ○ | | |
| L | DOWN | ○ | | | ○ | ○ | | |
| | | | ○ | ○ | | | | |
| L | LEFT | ○ | | ○ | | ○ | | |
| | | | ○ | | ○ | | | |
| L | RIGHT | ○ | | | ○ | | | |
| | | | ○ | ○ | | ○ | | |

**Defogger Switch (With Defogger)**

| Position \ Terminal | 9 | 1 | | 10 |
|---|---|---|---|---|
| ON | ○ | ○ | ⊗ | ○ |
| OFF | ○ | | ⊗ | ○ |

**Switch Light**

| Position \ Terminal | 2 | | 8 |
|---|---|---|---|
| ON/OFF | ○ | ⊗ | ○ |

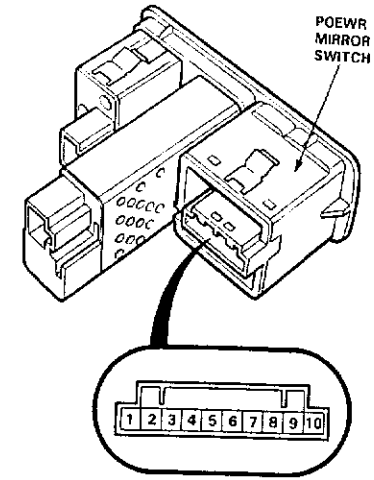


**Without defogger model:**

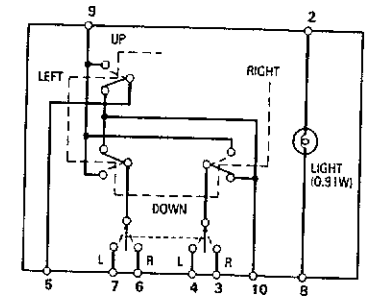


**With defogger model:**

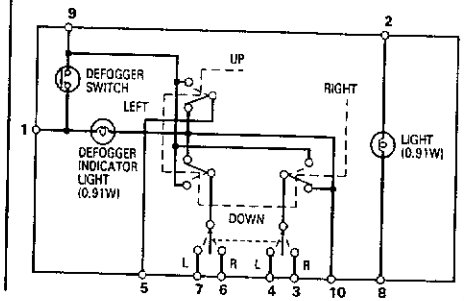

## Door Mirror Test

1. Remove the cover panel, then disconnect the 3-P connector and 2-P connector (with defogger) from the power mirror actuator.
2. Check actuator operation by connecting power and ground according to the table.

TILT:

| Position \ Terminal | 1 | 2 |
|---|---|---|
| UP | ⊕ | ⊖ |
| DOWN | ⊖ | ⊕ |

SWING:

| Position \ Terminal | 2 | 3 |
|---|---|---|
| LEFT | ⊕ | ⊖ |
| RIGHT | ⊖ | ⊕ |

3. Check for continuity between the terminals according to the table.

**With defogger model:**

| Position \ Terminal | 4 | 5 |
|---|---|---|
| ON | ○ | ○ |

4. If the mirror fails to operate properly, replace it.

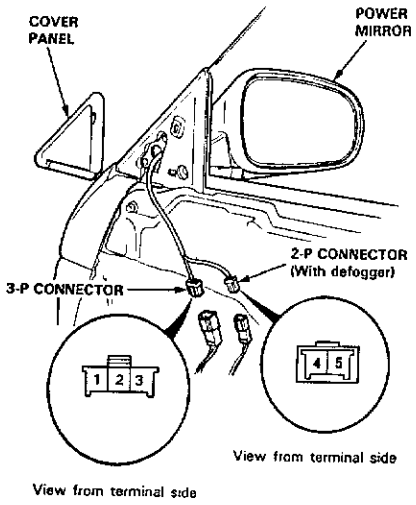


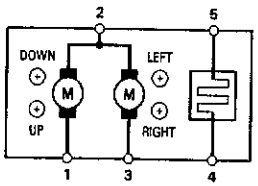




## Power Mirror Replacement

1. Carefully pry out the cover panel with a flat tip screwdriver.
2. Remove the door panel.
3. Disconnect the 3-P connector and 2-P connector (with defogger) from the mirror.
4. While holding the mirror with one hand, remove its mounting screws with the other.

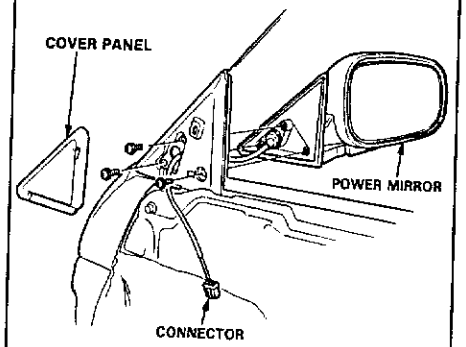

## Component Location Index

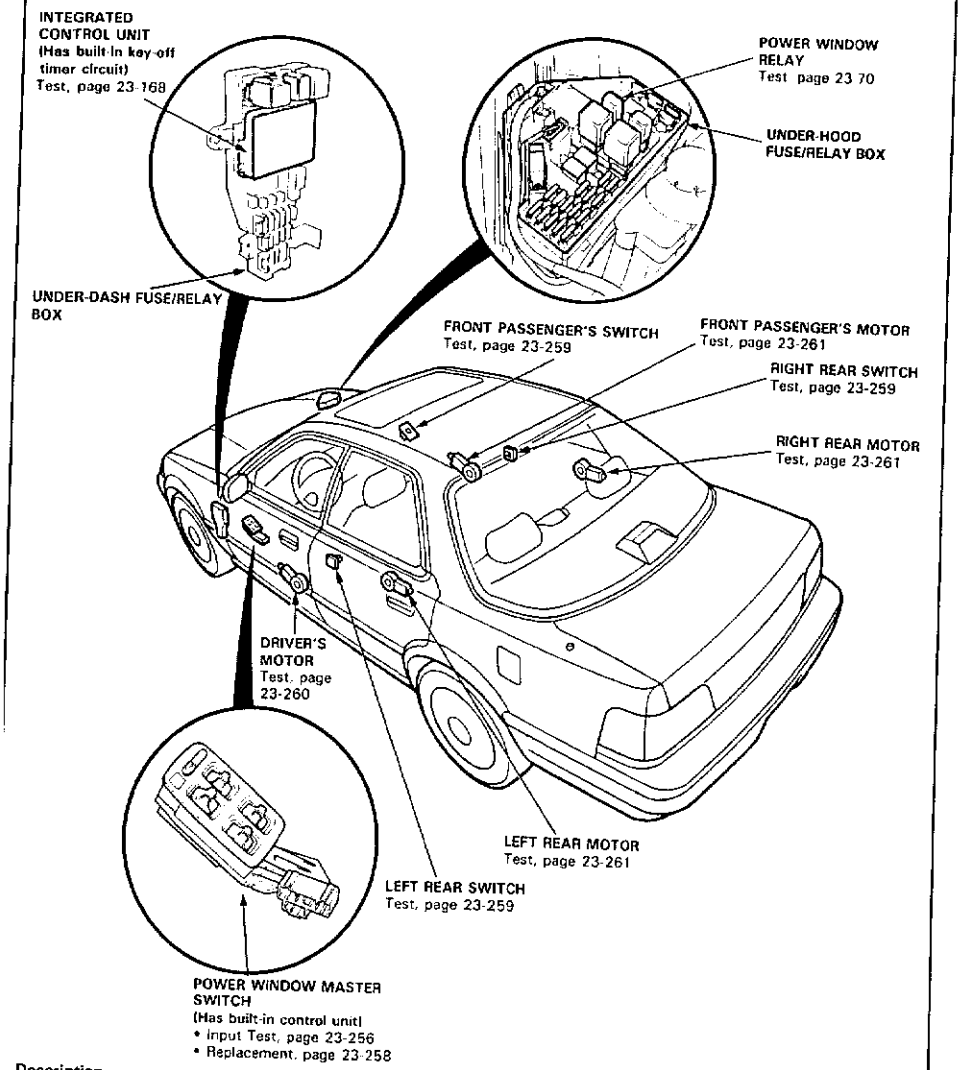


**Description**

Power Window Key-off Timer Operation:
The power windows can still be operated for about 10 minutes after the ignition switch is turned from the " II " to the " I " or " O " position, as long as neither of the front doors has been opened. This provides a convenience to parked occupants while offering a degree of security against unwanted or accidental window operation.



## Circuit Diagram

NOTE:
- Different wires with the same color have been given a number suffix to distinguish them (for example, BLU/RED[1] and BLU/RED[2] are not the same).
- "DN" in the switch circuit denotes DOWN.

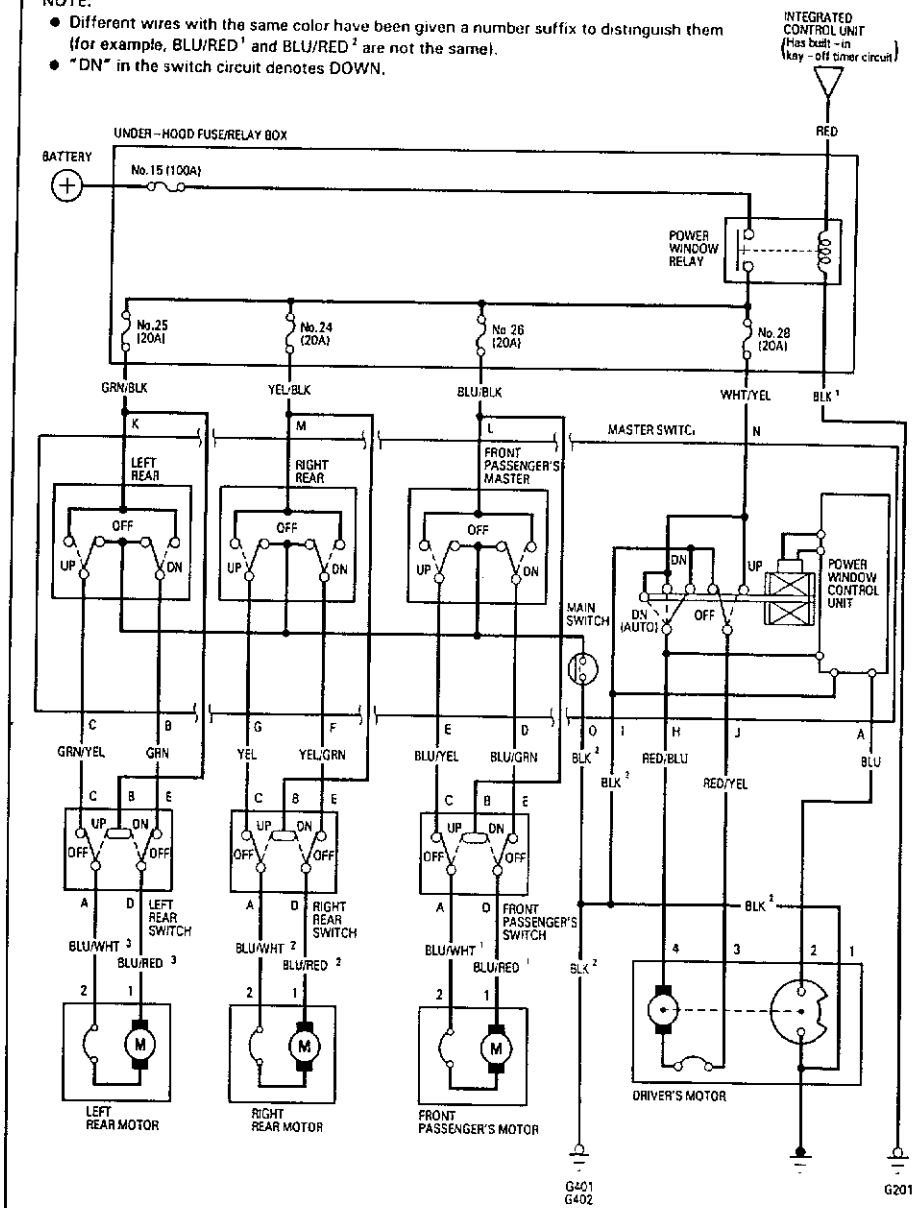

## Troubleshooting

NOTE: The numbers in the table show the troubleshooting sequence.

| Symptom \ Item to be inspected | | Blown No. 15 (100 A) fuse (in the under-hood fuse/relay box) | Blown No. 37 (15 A) fuse (in the under-hood fuse/relay box) | Power window realy | Blown No.28 (20 A) fuse (In the under-hood box) | Blown No.26 (20 A) fuse (In the under-hood box) | Blown No.24 (20 A) fuse (In the under-hood box) | Blown No.25 (20 A) fuse (In the under-hood box) | Power window master switch | Passenger's switch | Driver's motor | Pulser (In driver's motor) | Passenger's motor | Window regulator | Power window master switch input | Door switches | Key-off timer circuit (In the integrated control unit) | Poor ground | Open circuit wires, loose or disconnected terminals |
|---|---|---|---|---|---|---|---|---|---|---|---|---|---|---|---|---|---|---|---|
| All windows do not work. | | 1 | 2 | 3 | | | | | | | | | | | | | 4 | G201 G401 G402 | RED |
| Driver's window does not work. | | | | | 1 | | | | | | 2 | | | 3 | 4 | | | G401 G402 | WHT/YEL |
| Driver's window does not work in AUTO. | | | | | | | | | 1 | | | 2 | | | 3 | | | | BLU |
| Passenger's windows do not work. | Front Passenger's | | | | | 1 | | | 2 | 3 | | | 4 | 5 | | | | | BLU/BLK |
| | Left rear | | | | | | | 1 | 2 | 3 | | | 4 | 5 | | | | | GRN/BLK |
| | Right rear | | | | | | 1 | | 2 | 3 | | | 4 | 5 | | | | | YEL/BLK |
| All windows do not operate within 10 minutes after the ignition switch is OFF. | | | 1 | | | | | | | | | | | | | 2 | 3 | | |



## Power Window Master Switch Test

1. Remove the switch from the driver's door panel
2. Check for continuity between the terminals in each switch position according to the tables.

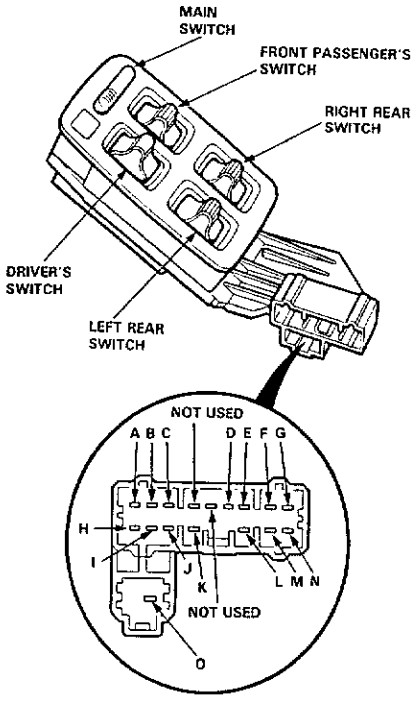


**Driver's Switch**

| Position \ Terminal | N | J | I | H |
|---|---|---|---|---|
| OFF | | ○ | ○ | ○ |
| UP | ○ | | | ○ |
| DOWN | ○ | ○ | | |
| DOWN (AUTO) | ○ | ○ | | |

**Front Passenger's Switch**

| Position | Main Switch \ Terminal | D | E | L | O |
|---|---|---|---|---|---|
| OFF | ON | ○ | ○ | | ○ |
| | OFF | ○ | ○ | | |
| UP | ON | | ○ | ○ | |
| | OFF | | ○ | ○ | |
| DOWN | ON | ○ | | ○ | |
| | OFF | ○ | | ○ | |

**Right Rear Switch**

| Position | Main Switch \ Terminal | F | G | M | O |
|---|---|---|---|---|---|
| OFF | ON | ○ | ○ | | ○ |
| | OFF | ○ | ○ | | |
| UP | ON | | ○ | ○ | |
| | OFF | | ○ | ○ | |
| DOWN | ON | ○ | | ○ | |
| | OFF | ○ | | ○ | |

**Left Rear Switch**

| Position | Main Switch \ Terminal | B | C | K | O |
|---|---|---|---|---|---|
| OFF | ON | ○ | ○ | | ○ |
| | OFF | ○ | ○ | | |
| UP | ON | | ○ | ○ | |
| | OFF | | ○ | ○ | |
| DOWN | ON | ○ | | ○ | |
| | OFF | ○ | | ○ | |

## Master Switch Input Test

NOTE: The control unit is built into the power window master switch, and only controls driver's door window operation.

1. Remove the driver's door panel and disconnect the 16 P and 2 P connectors from the power window master switch.

Inspect the connector terminals to be sure they are all making good contact.

- If the terminals are bent, loose or corroded, repair them as necessary, and recheck the system.
- If the terminals look OK, make the following input tests at the connector.
  - If any test indicates a problem, find and correct the cause, then recheck the system.
  - If all the input tests prove OK, the switch must be faulty; replace it.

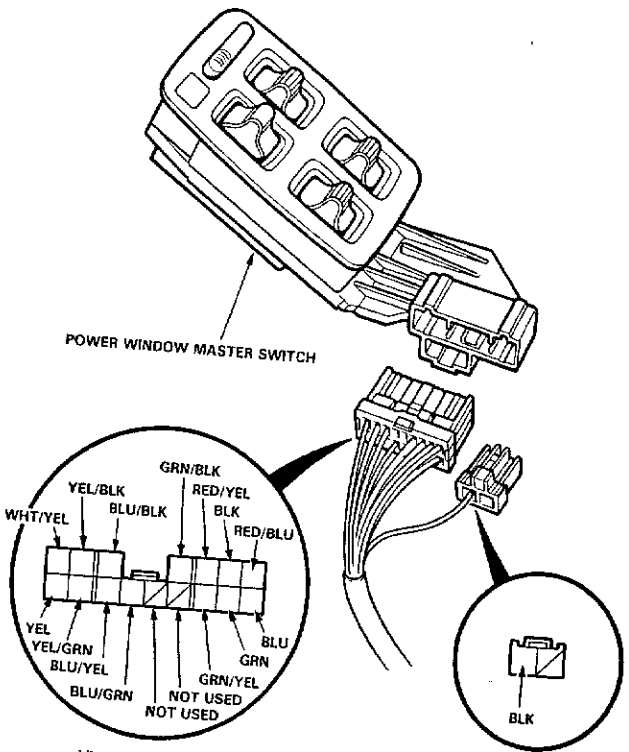


View from wire side.

View from wire side.



| No. | Terminal | Test condition | Test: Desired result | Possible cause if result is not obtained |
|---|---|---|---|---|
| 1 | BLK² | Under all conditions. | Check for continuity to gound There should be continuity | • Poor ground (G401, G402)<br>• An open in the wire. |
| 2 | WHT/YEL<br>BLU/BLK<br>YEL/BLK<br>GRN/BLK | Ignition switch ON. | Check for voltage to ground: There should be battery voltage. | • Blown No. 24, 25, 26 or 28 (20 A) fuse (in the under-hood fuse/relay box).<br>• Faulty power window relay<br>• An open in the wire. |
| 3 | RED/BLU and RED/YEL | Connect the WHT/YEL terminal to the RED/BLU terminal, and the RED/YEL terminal to the BLK² terminal, then turn the ignition switch ON. | Check the driver's motor operation: It should run. | • Faulty driver's motor.<br>• An open in the wire. |
| 4 | BLU/YEL and BLU/GRN | Connect the BLU/BLK terminal to the BLU/YEL terminal, and the BLU/GRN terminal to the BLK² terminal, then turn the ignition switch ON. | Check the front passenger's motor operation: It should run. | • Faulty front passenger's motor.<br>• Faulty front passenger's switch.<br>• An open in the wire. |
| 5 | YEL and YEL/GRN | Connect the YEL/BLK terminal to the YEL/GRN terminal, and the YEL terminal to the BLK² terminal, then turn the ignition switch ON. | Check the right rear motor operation: It should run (the window moves down). | • Faulty right rear motor.<br>• Faulty right switch<br>• An open in the wire. |
| 6 | GRN/YEL and GRN | Connect the GRN/BLK terminal to the GRN terminal, and the GRN/YEL terminal to the BLK² terminal, then turn the ignition switch ON. | Check the left rear motor operation: It should run (the window moves down). | • Faulty left rear motor.<br>• Faulty left rear switch.<br>• An open in the wire. |
| 7 | BLU and BLK² | Connect the WHT/YEL terminal to the RED/YEL terminal, and the BLK² terminal to the RED/BLU terminal, then turn the ignition switch ON. | Check for resistance between the BLU and BLK² terminals: Between 20-50 ohms should be indicated as the driver's motor runs. | • Faulty pulser.<br>• Faulty driver's motor.<br>• An open in the wire. |

## Master Switch Replacement

1. Remove the driver's door panel, and disconnect all connectors.
2. Remove the power window master switch from the door panel by unscrewing the mounting screws.

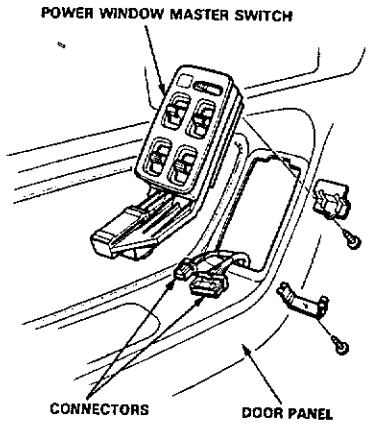


3. Install in the reverse order of removal.

## Passenger's Switch Replacement

1. Remove the door panel and disconnect the 5-P connector.
2. Remove the switch from the door panel by removing the mounting the screw.

   NOTE: The illustration shows the front passenger's switch.

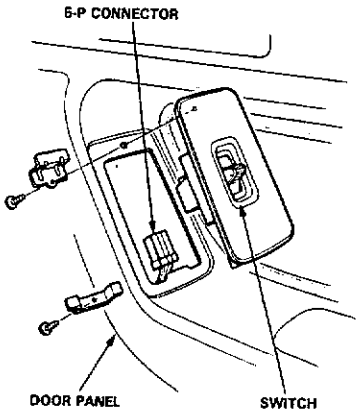


3. Install in the reverse order of removal.

## Passenger's Switch Test

1. Remove the door panel, and disconnect all connectors.
2. Remove the switch from the door panel by unscrewing the mounting screw.
3. Check for continuity between the terminals in each switch position according to the table.

   NOTE: The front passenger's switch is shown. The rear switches are similar.

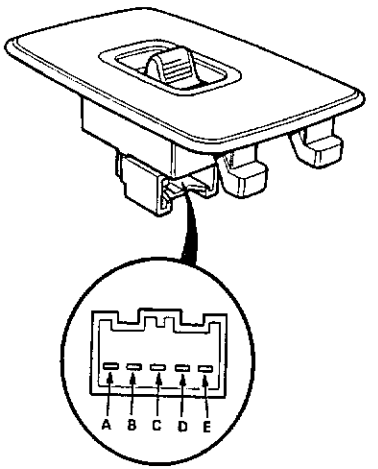


| Position \ Terminal | B | E | C | D | A |
|---|---|---|---|---|---|
| UP | ○ | | | | ○ |
| | | ○ | | ○ | |
| OFF | | ○ | | ○ | |
| | | | ○ | | ○ |
| DOWN | ○ | | | ○ | |
| | | | ○ | | ○ |

## Driver's Motor Test

**Motor Test:**

1. Remove the door panel.
2. Disconnect the 4-P connector from the driver's door wire harness.
3. Check motor operation by connecting power and ground according to the table.

| Terminal / Position | 1 | 2 |
|---|---|---|
| UP | ⊕ | ⊖ |
| DOWN | ⊖ | ⊕ |

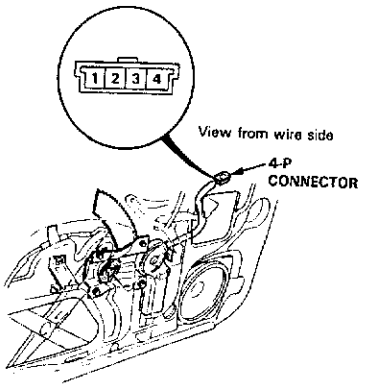


4. If the motor does not run, replace it.

Pulser Test:
Connect the test leads of an analog ohmmeter to the No.1 and No.2 terminals and check for needle movement while running the motor by applying battery voltage to the No.3 and No.4 terminals.
The analog ohmmeter needle should move back and forth alternately.

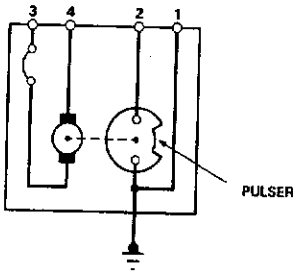




## Passenger's Motor Test

1. Remove the door panel.
2. Disconnect the 2-P connector from the motor.
3. Check motor operation by connecting power and ground according to the table.

| Terminal / Position | 1 | 2 |
|---|---|---|
| UP | ⊖ | ⊕ |
| DOWN | ⊕ | ⊖ |

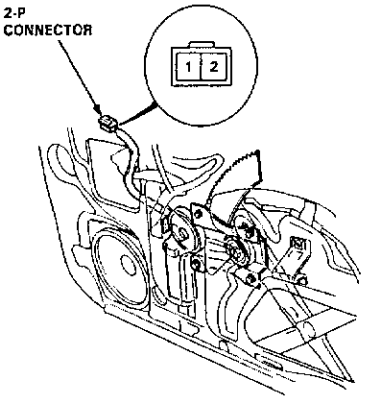


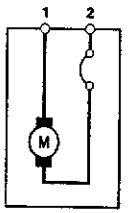


4. If the motor does not run, replace it.

## Component Location Index

CAUTION:
- All SRS electrical wiring harnesses are covered with yellow outer insulation.
- Before disconnecting the SRS wire harness, install the short connector (s) on the airbag (s).
- Replace the entire affected SRS harness assembly if it has an open circuit or damaged wiring.

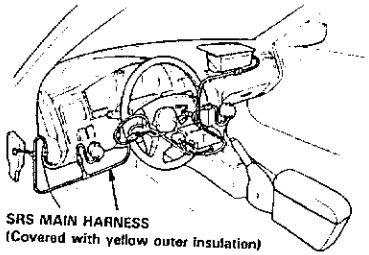


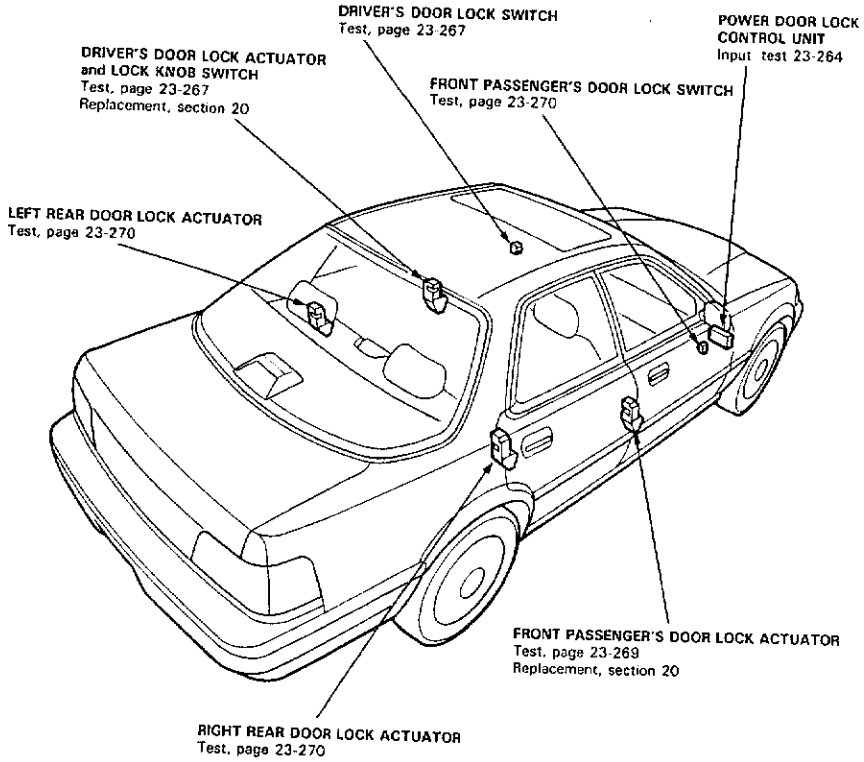




## Circuit Diagram

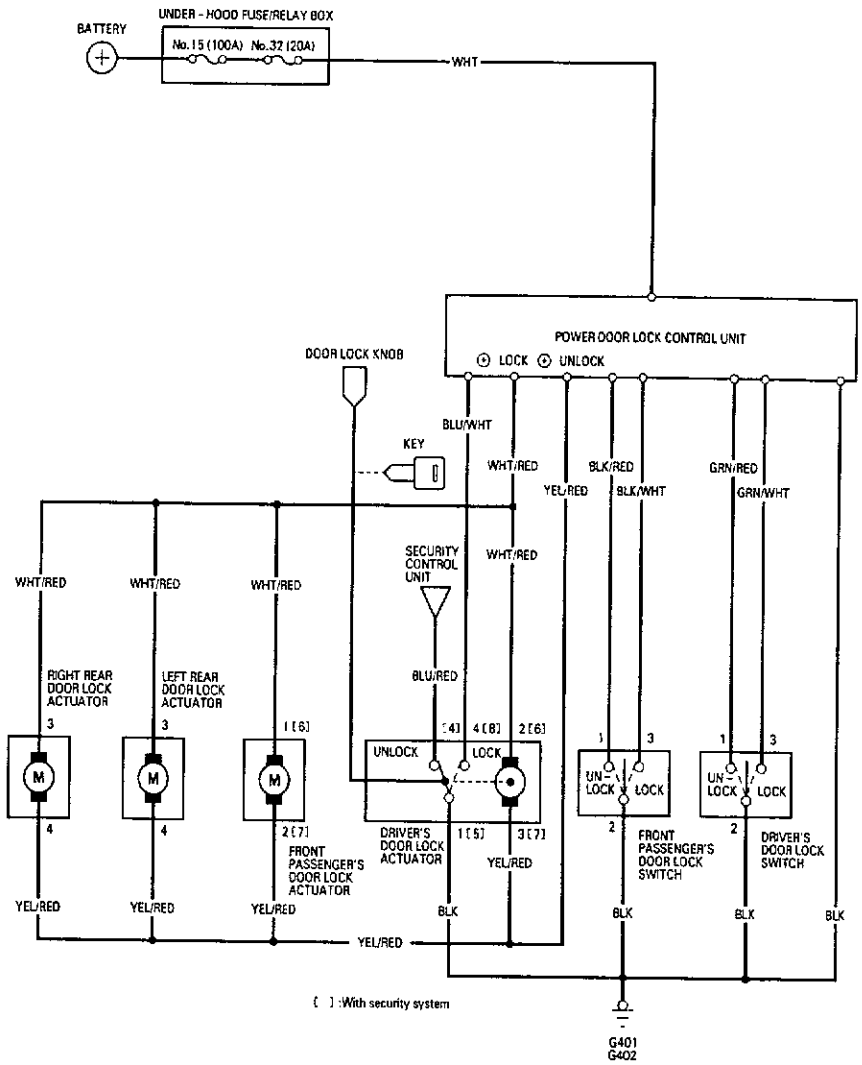

## Control Unit Input Test

CAUTION:
- All SRS electrical wiring harnesses are covered with yellow outer insulation.
- Before disconnecting the SRS wire harness, install the short connector (s) on the airbag (s).
- Replace the entire affected SRS harness assembly if it has an open circuit or damaged wiring.

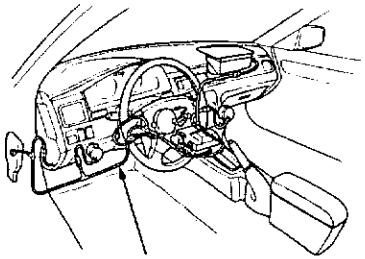

SRS MAIN HARNESS
(Covered with yellow outer insulation)

Remove the glove box, then disconnect the 12-P connector from the control unit.

Inspect the connector terminals to be sure they are all making good contact.

- If the terminals are bent, loose or corroded, repair them as necessary, and recheck the system.
- If the terminals look OK, make the following input tests at the connector.
  - If any test indicates a problem, find and correct the cause, then recheck the system.
  - If all the input tests prove OK, the control unit must be faulty; replace it.

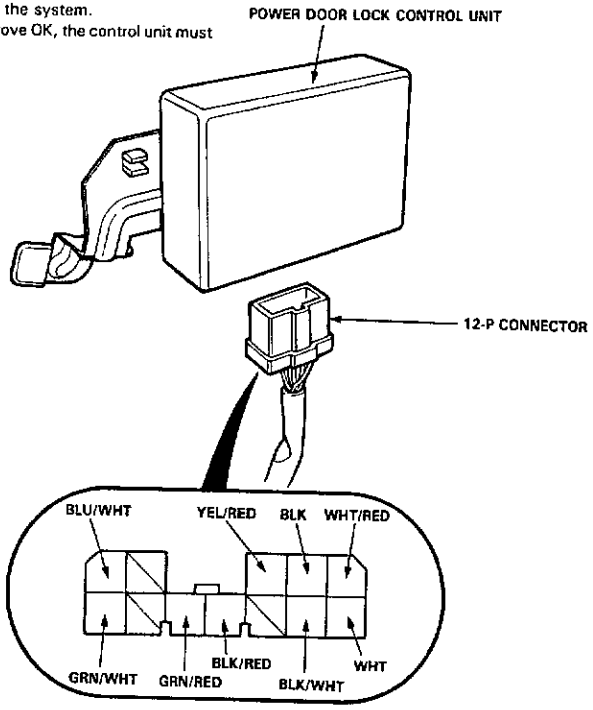


View from wire side



| No. | Terminal | Test condition | Test: Desired result | Possible cause if result is not obtained |
|---|---|---|---|---|
| 1 | BLK | Under all conditions. | Check for continuity to gound: There should be continuity. | • Poor ground (G401, G402)<br>• An open in the wire. |
| 2 | WHT | Under all conditions. | Check for voltage to ground: There should be continuity. | • Blown No. 32 (20 A) fuse (in the under-hood fuse/relay box).<br>• An open in the wire. |
| 3 | GRN/WHT | Move the driver's power door lock switch from the neutral position to LOCK. | Check for voltage to ground: There should be less than 1V. | • Faulty driver's power door lock switch.<br>• Poor ground (G401, G402).<br>• An open in the wire.<br>• Short to ground.<br>• Faulty control unit. |
| 4 | GRN/RED | Move the driver's power door lock switch from the neutral position to UNLOCK. | | |
| 5 | BLK/RED | Move the front passenger's power door lock switch from the neutral position to LOCK. | Check for voltage to ground: There should be less than 1V. | • Faulty front passenger's power door lock switch.<br>• Poor ground (G401, G402).<br>• An open in the wire.<br>• Short to ground.<br>• Faulty control unit. |
| 6 | BLK/RED | Move the front passenger's power door lock switch from the neutral position to UNLOCK. | | |
| 7 | BLU/WHT | Driver's door lock knob in LOCK. | Check for voltage to ground: There should be less than 1V. | • Faulty driver's door actuator.<br>• Poor ground (G401, G402)<br>• An open in the wire. |
| | | Driver's door lock knob in UNLOCK. | Check for voltage to ground: There should be battery voltage. | • Faulty driver's door actuator.<br>• Short to ground.<br>• Faulty control unit. |
| 8 | WHT/RED or YEL/RED | Connect the WHT terminal to the WHT/RED terminal, and the YEL/RED terminal to the BLK terminal momentarily. | Check door lock operation: All doors should lock as the battery is connected momentarily. | • Faulty passenger's door actuator.<br>• Faulty driver's door actuator.<br>• An open in the wire. |
| | | Connect the WHT terminal to the YEL/RED terminal, and the WHT/RED terminal to the BLK terminal momentarily. | Check door unclok operation: All doors should unlock as the battery is connected mementarily. | |

CAUTION: To prevent damage to the motor, apply battery voltage momentarily.

## Troubleshooting

NOTE: The numbers in the table show the troubleshooting sequence.

| Symptom \ Item to be inspected | | Blown No. 32 (20 A) fuse (in the under-hood fuse/relay box) | Door lock knob switch (in the driver's door actuator) | Control unit input | Passenger's door actuator | Disconnected or obstructed door lock rod/linkage | Driver's power door lock switch | Passenger's power door lock switch | Poor ground | Open circuit wires, loose or disconnected terminals |
|---|---|---|---|---|---|---|---|---|---|---|
| Power door lock system does not work at all. | | 1 | | 2 | | | | | G401 G402 | WHT |
| Doors do not lock with driver's door lock knob switch. | All doors. | | | | | 1 | | | | |
| | All passenger's doors. | 1 | 2 | 3 | | 4 | | | G401 G402 | BLU/WHT, YEL/RED or WHT/RED |
| | One or more doors. | | | | 1 | | | | | YEL/RED or WHT/RED |
| Doors do not lock or unlock with driver's power door lock switch. | All doors. | 1 | | 3 | | 4 | 2 | | G401 G402 | GRN/RED, GRN/WHT YEL/RED or WHT/RED |
| | One or more doors. | | | | 1 | | | | | YEL/RED or WHT/RED |
| Doors do not lock or unlock with front passenger's power door lock switch. | All doors. | 1 | | 3 | | 4 | | 2 | G401 G402 | BLK/RED, BLK/WHT, YEL/RED or WHT/RED |
| | One or more doors. | | | | 1 | | | | | YEL/RED or WHT/RED |

**CAUTION: To prevent damage to the motor, apply battery voltage momentarily.**



## Driver's Door Actuator Test (With Security System)

1. Remove the door panel.
2. Disconnect the 8-P connector from the actuator.
3. Check actuator operation by connecting power and ground according to the table.

| Position \ Terminal | 6 | 7 |
|---|---|---|
| LOCK | ⊕ | ⊖ |
| UNLOCK | ⊖ | ⊕ |

**CAUTION: To prevent damage to the motor, only apply battery voltage momentarily.**

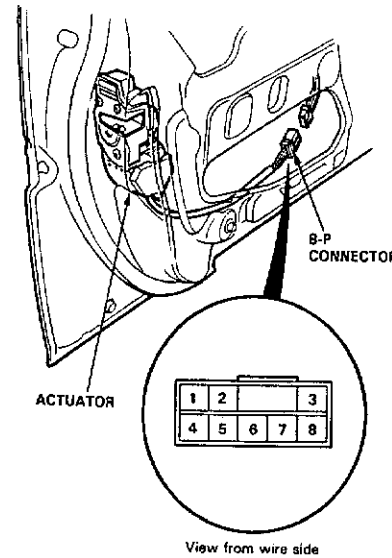


4. If the actuator fails to operate properly, replace it.

5. Check for continuity between the terminals in each switch position according to the table.

| Position \ Terminal | 8 | 5 | 4 |
|---|---|---|---|
| LOCK | ○—— | ——○ | |
| UNLOCK | | ○—— | ——○ |

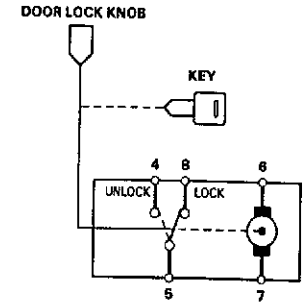

## Driver's Door Actuator (Without Security System)

1. Remove the door panel.
2. Disconnect the 4-P connector from the actuator.
3. Check actuator operation by connecting power and ground according to the table.

| Terminal / Position | 2 | 3 |
|---|---|---|
| LOCK | ⊕ | ⊖ |
| UNLOCK | ⊖ | ⊕ |

**CAUTION: To prevent damage to the motor, only apply battery voltage momentarily.**

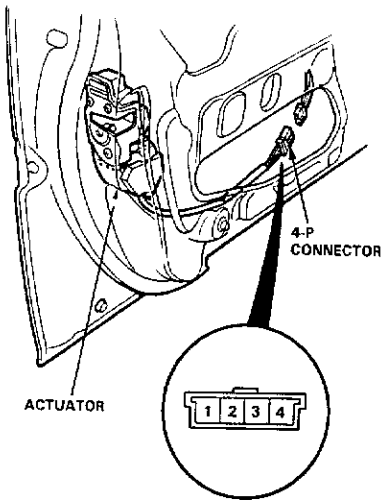


View from wire side

4. If the actuator fails to operate properly, replace it.

5. Check for continuity between the terminals in each switch position according to the table.

| Terminal / Position | 1 | 4 |
|---|---|---|
| LOCK | ○ | ○ |
| UNLOCK | | |

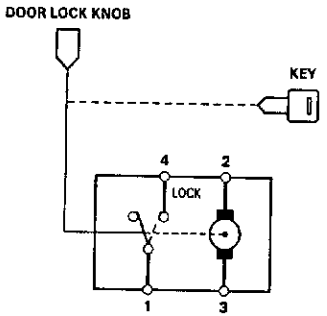




## Front Passenger's Door Actuator Test

**With Security System:**

1. Remove the door panel.
2. Disconnect the 8-P connector from the actuator.
3. Check actuator operation by connecting power and ground according to the table.

| Terminal / Position | 6 | 7 |
|---|---|---|
| LOCK | ⊕ | ⊖ |
| UNLOCK | ⊖ | ⊕ |

**CAUTION: To prevent damage to the motor, only apply battery voltage momentarily.**

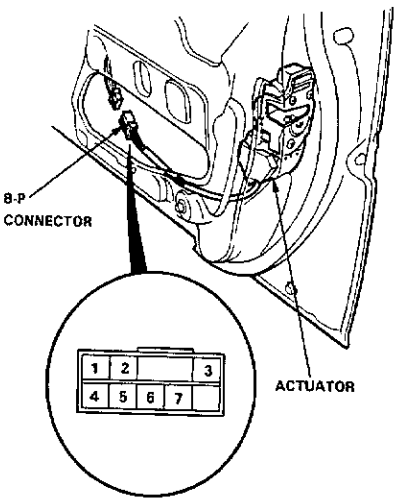


View from wire side

4. If the actuator fails to operate properly, replace it.

**Without Security System:**

1. Remove the door panel.
2. Disconnect the 2-P connector from the actuator.
3. Check actuator operation by connecting power and ground according to the table.

| Terminal / Position | 1 | 2 |
|---|---|---|
| LOCK | ⊕ | ⊖ |
| UNLOCK | ⊖ | ⊕ |

**CAUTION: To prevent damage to the motor, apply battery voltage momentarily.**

NOTE: Right front actuator shown, rear actuators similar.

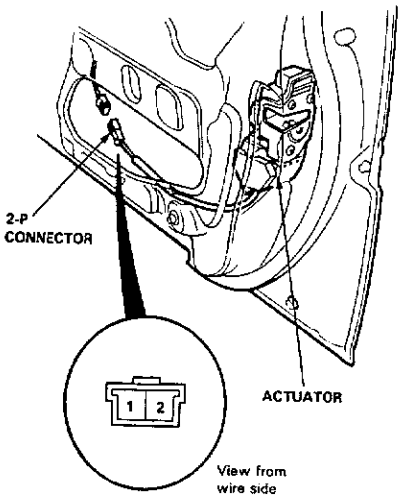


View from wire side

4. If the actuator fails to operate properly, replace it.

## Rear Door Lock Actuator Test

1. Remove the door panel.
2. Disconnect the 4-P connector from the actuator.
3. Check actuator operation by connecting power and ground according to the table.

| Position \ Terminal | 3 | 4 |
|---|---|---|
| LOCK | ⊕ | ⊖ |
| UNLOCK | ⊖ | ⊕ |

**CAUTION: To prevent damage to the motor, only apply battery voltage momentarily.**

NOTE: The illustration shows right rear door.

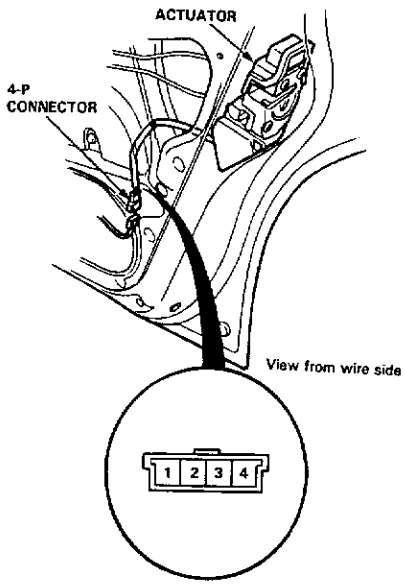


4. If the actuator fails to operate properly, replace it.

## Door Lock Switch Test

1. Remove the inside handle trim plate with switch.

   NOTE: The illustration shows front passenger's door.

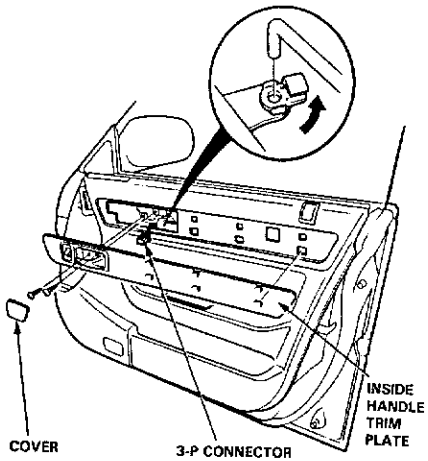


2. Disconnect the 3-P connector of the switch.
3. Check for continuity between the terminals in each switch position according to the table.

| Position \ Terminal | 3 | 2 | 1 |
|---|---|---|---|
| UNLOCK | | ○—○ | |
| OFF | | | |
| LOCK | ○—○ | | |

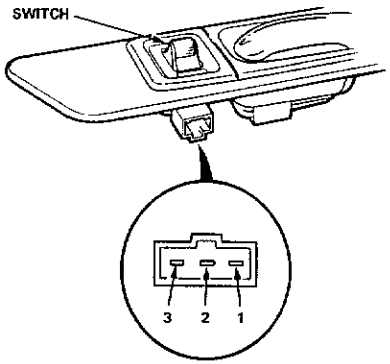

## Component Location Index

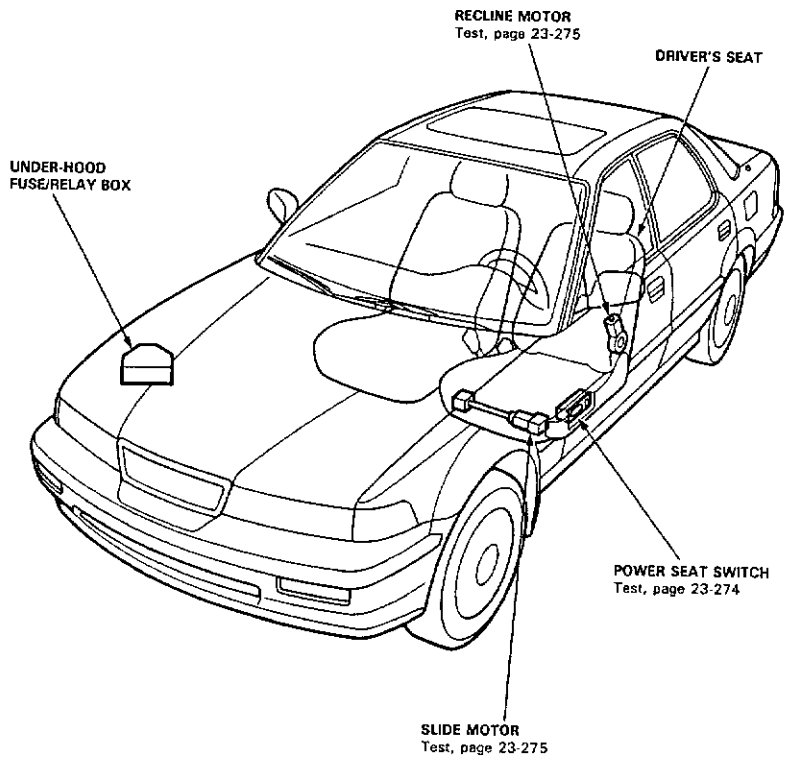




## Circuit Diagram

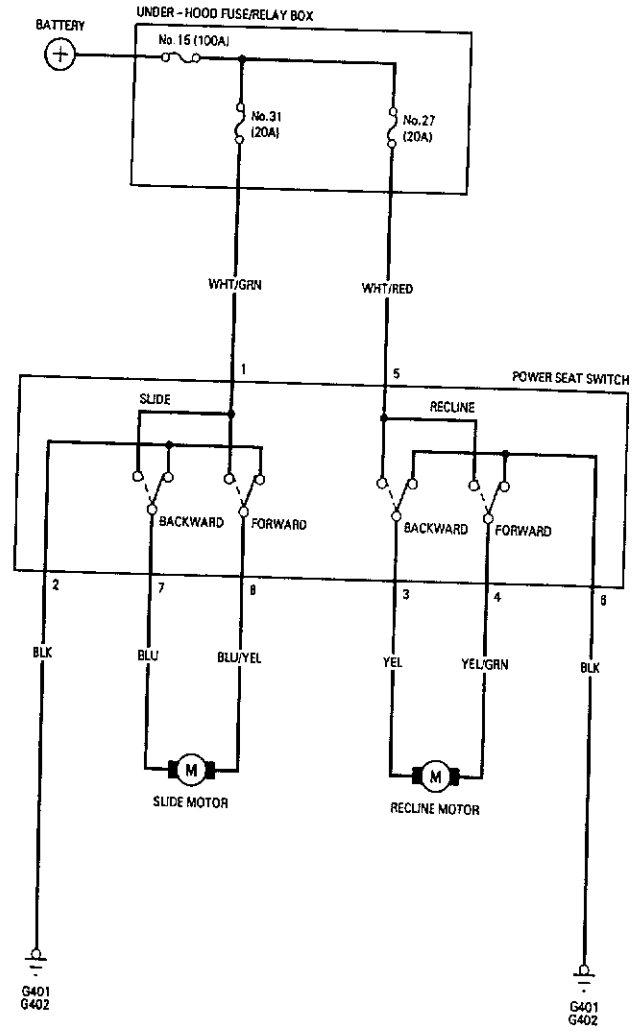

## Seat Switch Test

**CAUTION: Be careful not to damage the seats, the interior trim or the body.**

1. Remove the two screws, then remove the power seat switch from the power seat.
2. Disconnect the 6-P connectors from each switch.
3. Check for continuity between the terminals in each switch position according to the table.

| Position \ Terminal | | 1 | 2 | 3 | 4 | 5 | 6 | 7 | 8 |
|---|---|---|---|---|---|---|---|---|---|
| SLIDE | FORWARD | ○ | | | | | | | ○ |
| | NEUTRAL | | ○ | | | | | ○ | ○ |
| | BACKWARD | ○ | | | | | | ○ | |
| RECLINE | FORWARD | | | | ○ | ○ | | | |
| | NEUTRAL | | | ○ | ○ | | ○ | | |
| | BACKWARD | | | ○ | | ○ | | | |

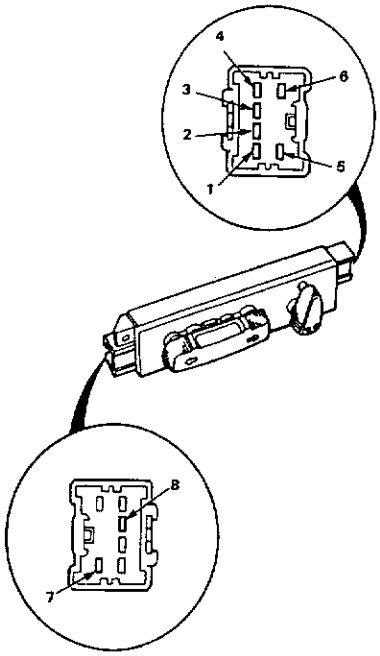




## Motor Test

**CAUTION: Be careful not to damage the seats, the interior trim or the body.**

1. Remove the power seat, then disconnect the 2-P connector from the slide motor.
2. Remove the two screws, then remove the power seat switch from the power seat.
3. Disconnect the 6-P connector from the recline switch.

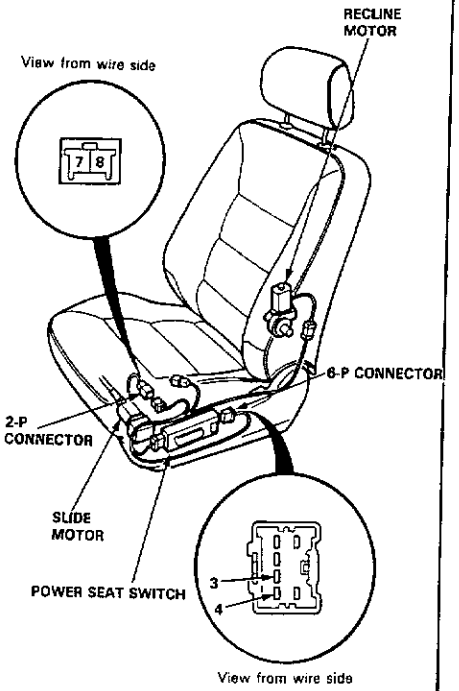


4. Check motor operation by connecting power and ground according to the table.

**CAUTION: When the motor stops running, disconnect a battery terminal immediately.**

**SLIDE MOTOR:**

| Position \ Terminal | 7 | 8 |
|---|---|---|
| FORWARD | ⊖ | ⊕ |
| BACKWARD | ⊕ | ⊖ |

**RECLINE MOTOR:**

| Position \ Terminal | 3 | 4 |
|---|---|---|
| FORWARD | ⊖ | ⊕ |
| BACKWARD | ⊕ | ⊖ |

NOTE: When a motor does not run, reverse the battery terminal connection. If the motor still does not run, the motor or the wire harness is defective. For replacing the motor see section 20.

## Component Location Index

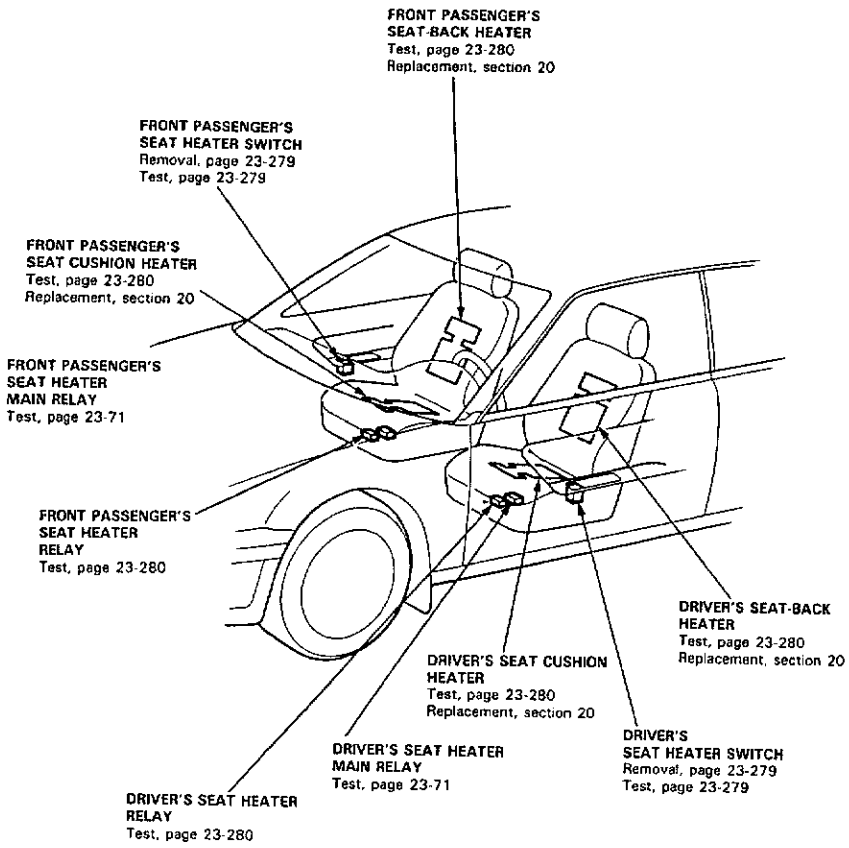




## Circuit Diagram

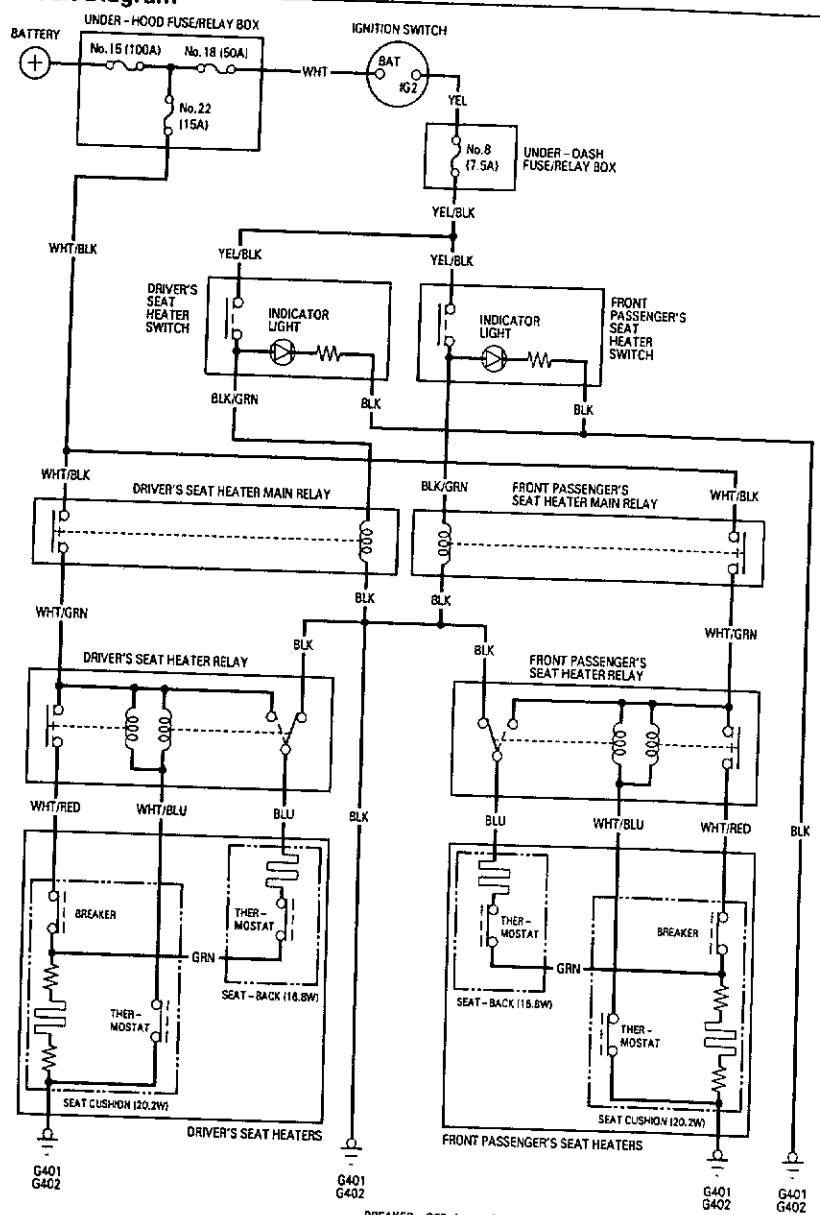


BREAKER: OFF above 122°F (50°C)/ON above 86°F (30°C
THERMOSTAT: OFF above 104°F (40°C)/ON above 68°F (20°C)

## Troubleshooting

NOTE: The numbers in the table show the troubleshooting sequence.

| Symptom \ Item to be inspected | | Blown No. 22 (15 A) fuse (In the under-hood fuse/relay box) | Blown No. 8 (7.5 A) fuse (In the under-hood fuse/relay box) | Blown indicator light bulb | Seat heater switch | Seat heater | Thermostat (In the seat cushion heater) | Seat heater main relay input | Seat heater relay | Poor ground | Open circuit wires, loose or disconnected terminals |
|---|---|---|---|---|---|---|---|---|---|---|---|
| Seat heaters work, but indicator light does not go on. | | | | 1 | | | | | | G401 G402 | |
| Seat heaters do not work and indicator light does not go on. | | 1 | | | 3 | | | 2 | | G401 G402 | WHT/BLK or YEL/BLK |
| Seat heaters do not work, but indicator light goes on. | Driver's seat | | | | | | 3 | 1 | 2 | G401 G402 | BLK/GRN, WHT/GRN |
| | Front passenger's seat | | | | | | 3 | 1 | 2 | G304 | WHT/RED, WHT/BLU, BLU |
| Seat cushion heater or seat-back heater does not work, but indicator light goes on. | | | | | | 1 | | | | | |



## Switch Removal

1. Pry out the switch from the armrest.
2. Disconnect the 5-P connector to remove the switch.

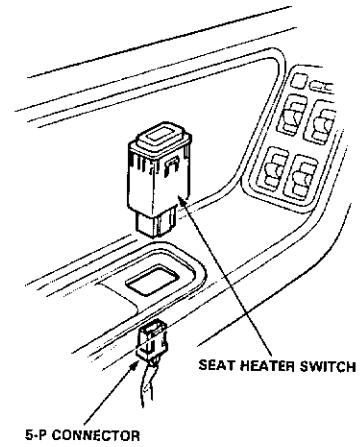


## Switch Test

1. Pry out the seat heater switch from the armrest.
2. Check for continuity between the terminals according to the table.

| Terminal / Position | A | | B | | C |
|---|---|---|---|---|---|
| ON | ○ | | ○ | ⊗ | ○ |
| OFF | | | | | |

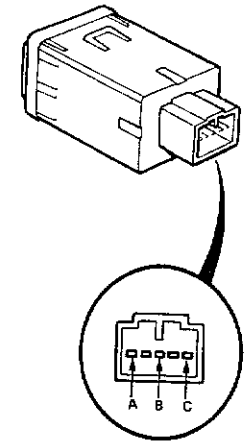


View from terminal side

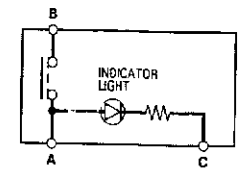

## Heater Test

1. Disconnect the 6-P connector and 2-P connector as shown below

NOTE: Driver's seat is shown. Front passenger's seat is similar

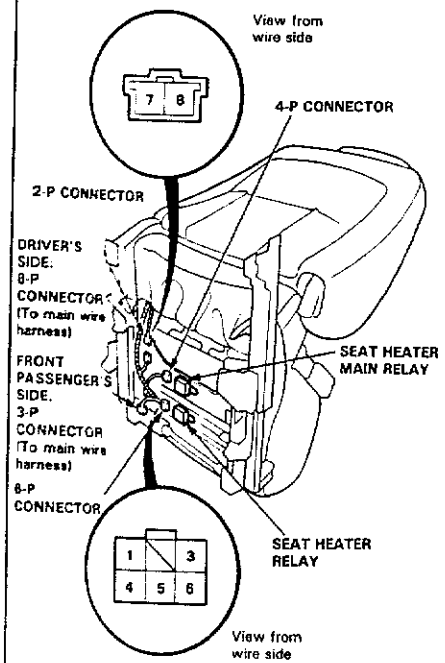


2. Check for continuity between the No.1 and No.5 terminals; between the No.7 and No.8 terminals (R x $10^3$ scale).
   There should be continuity.

## Heater Relay Test

1. Remove the driver's seat, then remove the relay from the bottom of the seat.
2. There should be continuity between the F and A terminals and between the C and D terminals when the battery is connected across the F and E terminals. There should be continuity between the F and D terminals when the battery is disconnected.

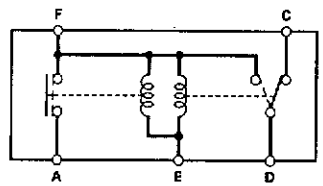






## Component Location Index

CAUTION:
- All SRS electrical wiring harnesses are covered with yellow outer insulation.
- Before disconnecting the SRS wire harness, install the short connector (s) on the airbag (s).
- Replace the entire affected SRS harness assembly if it has an open circuit or damaged wiring.

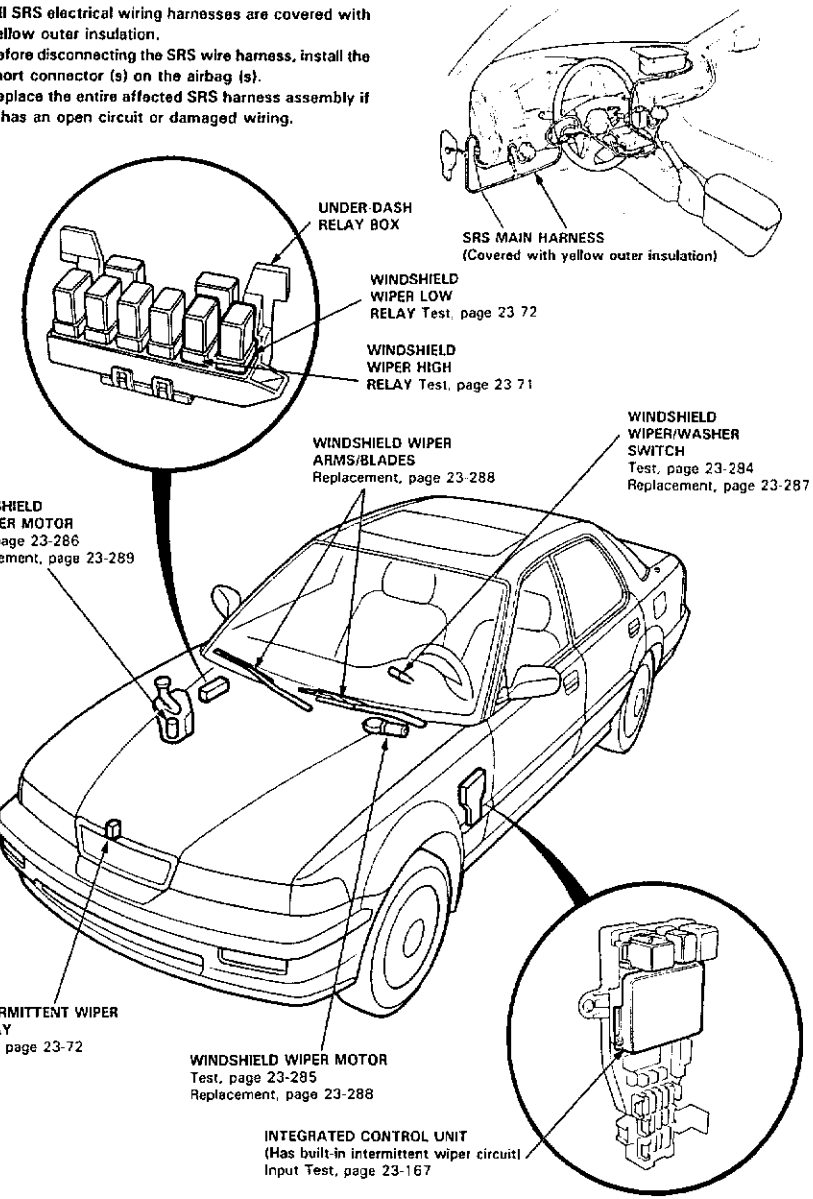

## Circuit Diagram

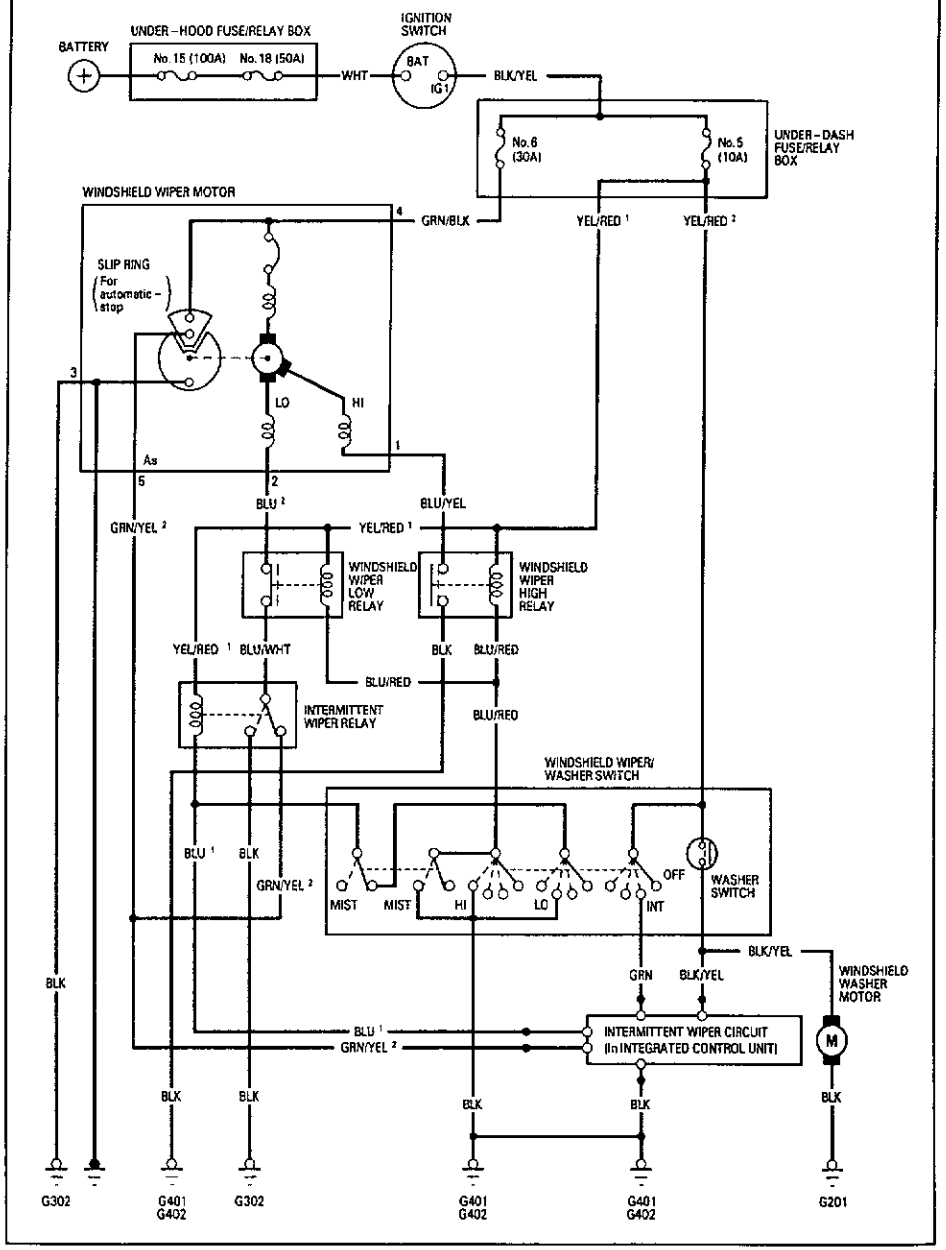




## Troubleshooting

NOTE: The numbers in the table show the troubleshooting sequence.

| Symptom | Item to be Inspected | Blown No. 6 (30 A) fuse (In the under-hood fuse/relay box) | Blown No. 5 (10 A) fuse (In the under-dash fuse/relay box) | Wiper switch | Mist switch | Wiper motor assembly | Washer switch | Washer motor | Intermittent wiper relay | Wiper low relay | Wiper high relay | Intermittent wiper circuit (In the integrated control unit) | Combined operation with wiper/ waser (In the integrated control unit) | Insufficient washer fluid in reservoir | Disconnected blocked washer hose or clogged outlet | Disconnected wiper linkages | Poor ground | Open circuit wires, loose or disconnected terminals |
|---|---|---|---|---|---|---|---|---|---|---|---|---|---|---|---|---|---|---|
| Wipers do not operate. | In all positions | 1 | | 4 | | 2 | | | | | | | | | | 3 | G302 | GRN/BLK |
| | In INT | | | 1 | | 4 | | | 2 | 3 | | 5 | | | | | G302 | YEL/RED[2] GRN GRN/YEL[2] |
| | In LO | | | 1 | | 4 | | | 2 | 3 | | 5 | | | | | G302 | YEL/RED[1] BLU/RED BLU[1] BLU[2] BLU/WHT |
| | In HI | | | 1 | | 3 | | | | | 2 | | | | | | G401 G402 | BLU/RED YEL/RED[1] BLU/YEL |
| | In MIST | | | | 1 | | | | | | 2 | | | | | | G401 G402 | BLU/RED YEL/RED[1] BLU[1] |
| Blades do not return to park position when wipers are turned OFF. | | | | 2 | | 1 | | | 3 | 4 | | | | | | | | GRN/YEL[2] |
| Erratic intermittent cycle or intermittent function does not work. | | | | | | | | | 1 | | | 2 | | | | | | BLU[1] |
| Little or no washer fluid is pumped. | | | 2 | | | | 5 | 4 | | | | | 1 | 3 | | | G201 | BLK/YEL |
| Wipers do not operate simultaneously with washer. | | | | | | | | | | | | 1 | | | | | | BLU[1] |

## Windshield Wiper/Washer Switch Test

1. Remove the dashboard lower panel (see section 20).
2. Disconnect the 10-P connector from the floor wire harness.
3. Check for continuity between the terminals in each switch position according to the table.

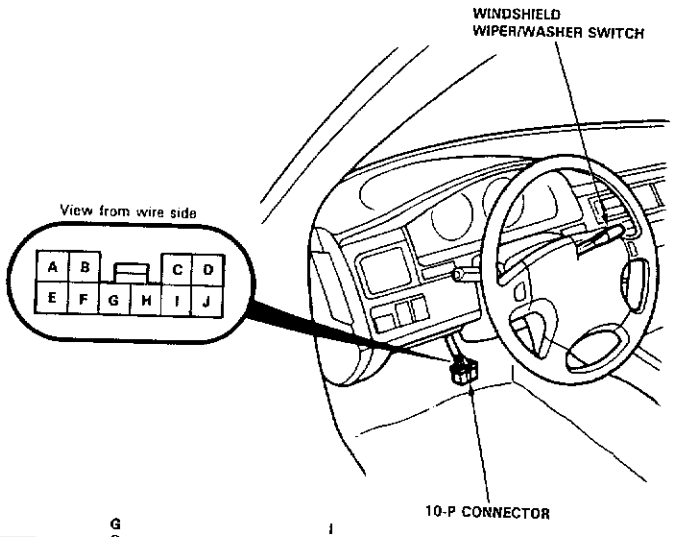


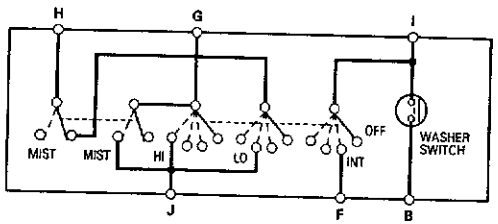


| Position \ Terminal | A | B | C | D | E | F | G | H | I | J |
|---|---|---|---|---|---|---|---|---|---|---|
| INT | | | | | | ○ | | | ○ | |
| LO | | | | | | | | ○ | | ○ |
| HI | | | | | | | ○ | | | ○ |
| Mist switch "ON" | | | | | | | ○ | | | ○ |
| Washer switch "ON" | | ○ | | | | | | | ○ | |



## Windshield Wiper Motor Test

1. Open the hood and remove the cap nuts and the wiper arms (see page 23-288 ).
   NOTE: Carefully remove the wiper arms so that they do not touch the hood.
2. Remove the hood seal and air scoop by prying out their trim clips.
3. Disconnect the 5-P connector from the windshield wiper motor.
4. Test the motor:

   LOW SPEED: Connect battery power to the No.4 terminal and ground to the No.2 terminal.
   HIGH SPEED: Connect battery power to the No.4 terminal and ground to the No.1 terminal.

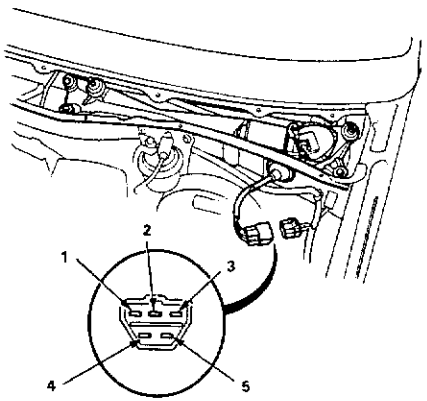


View from terminal side.

5. If the motor fails to run smoothly, replace it.
6. Connect an analog voltmeter between the No.5 and the No.3 terminals. Run the motor at low or high speed.

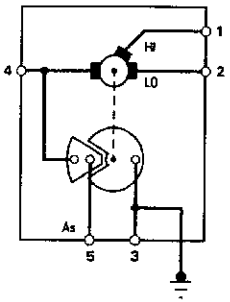


NOTE: As (Automatic stop)

The voltmeter should indicate 0V to more than 4V alternately.

NOTE:
- Use an analog tester.
- Use on the car battery

## Windshield Washer Motor Test

1. Remove the inner fender.
2. Disconnect the 2-P connector from the washer motor.
3. Test the washer motor operation by connecting battery power to the ⊕ terminal and ground to the ⊖ terminal.
   - If the motor fails to run smoothly, replace it.
   - If the motor runs smoothly, but little or no washer fluid is pumped, check for a disconnected or blocked washer hose, or a clogged pump outlet in the motor.

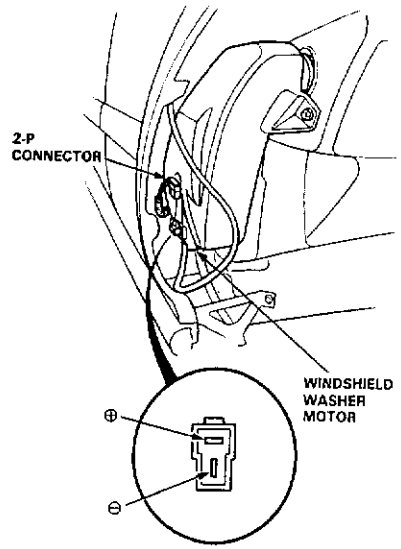




## Windshield Wiper/Washer Switch Replacement

**CAUTION:**
- **All SRS electrical wiring harnesses are covered with yellow outer insulation.**
- **Before disconnecting the SRS wire harness, install the short connector (s) on the airbag (s).**
- **Replace the entire affected SRS harness assembly if it has an open circuit or damaged wiring.**

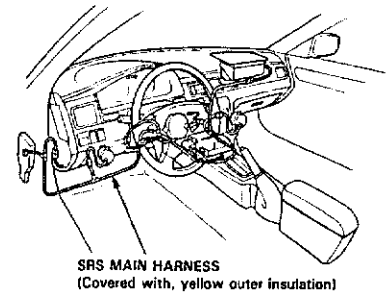


1. Remove the dashboard lower cover and knee bolster.

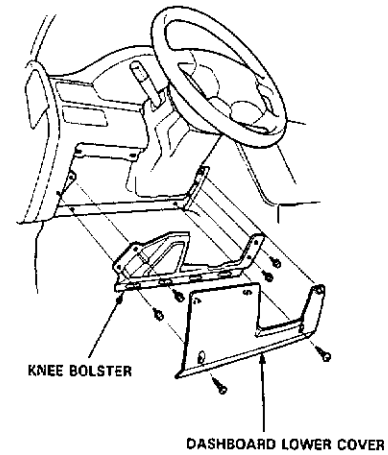


2. Remove the steering column covers.

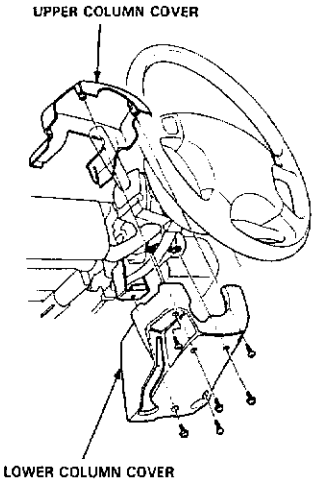


3. Disconnect the 10-P connector, then remove the windshield wiper/washer switch.

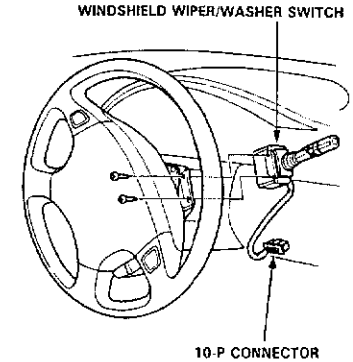

## Windshield Wiper Motor Replacement

1. Open the hood and remove the cap nuts and the wiper arms.

   NOTE: Carefully remove the wiper arms so that they do not touch the hood.

2. Remove the windshield lower molding, hood seal and air scoop by prying off the trim clips and removing the screws.

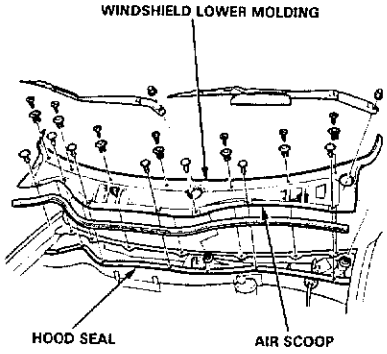


3. Disconnect the 5-P connector from the wiper motor, then remove the wiper harness from the wiper linkage.

4. Remove the wiper linkage assembly by removing the three mounting bolts.

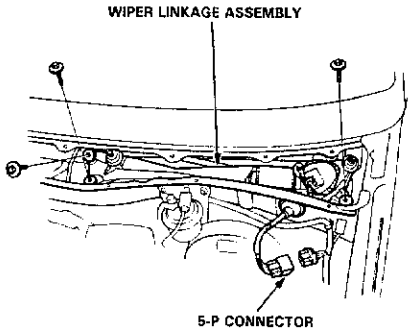


5. Remove the three mounting bolts and nut from the wiper linkage to remove the windshield wiper motor.

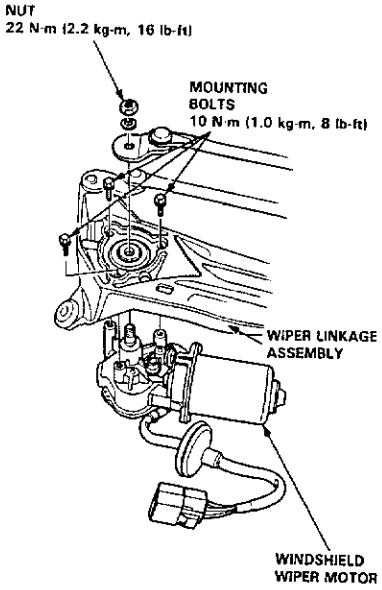


6. Install the windshield wiper motor in the reverse order of removal.



## Washer Replacement

1. Remove the washer filler assembly.
2. Remove the inner fender.
3. Disconnect the hose and the 2-P connectors from the washer motor.
4. Remove the washer reservoir by removing the two mounting bolts.
5. Remove the washer motor and washer level sensor from the washer reservoir.
6. Remove the washer nozzles and washer hose.

   NOTE:
   - Take care not to pinch the hoses during reinstallation.
   - Install the grommets firmly.
   - After installation, adjust the aim of the washer nozzles.

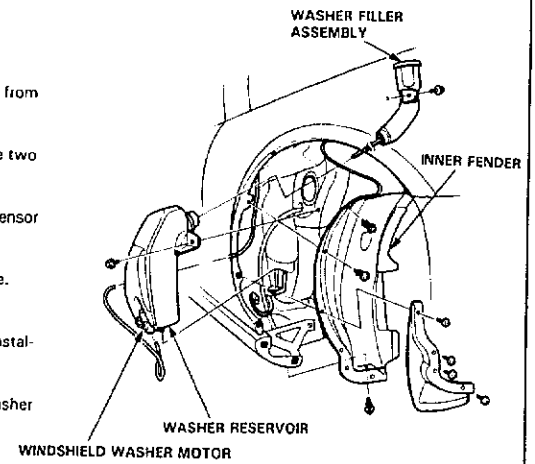


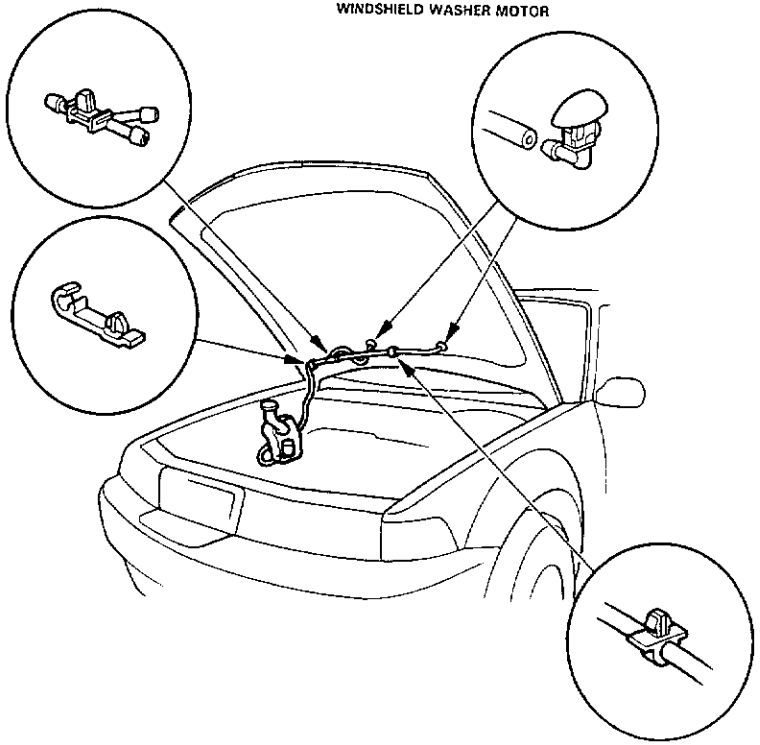

## Component Location Index

CAUTION:
- All SRS electrical wiring harnesses are covered with yellow outer insulation.
- Before disconnecting the SRS wire harness, install the short connector (s) on the airbag (s).
- Replace the entire affected SRS harness assembly if it has an open circuit or damaged wiring.

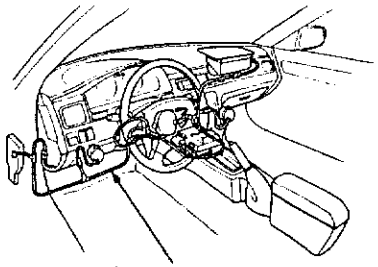


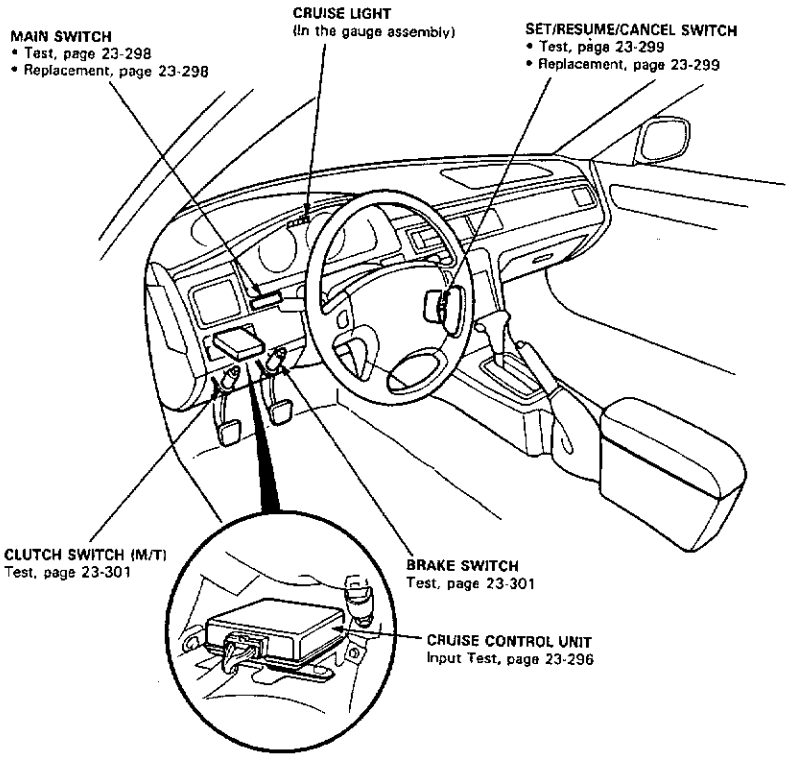




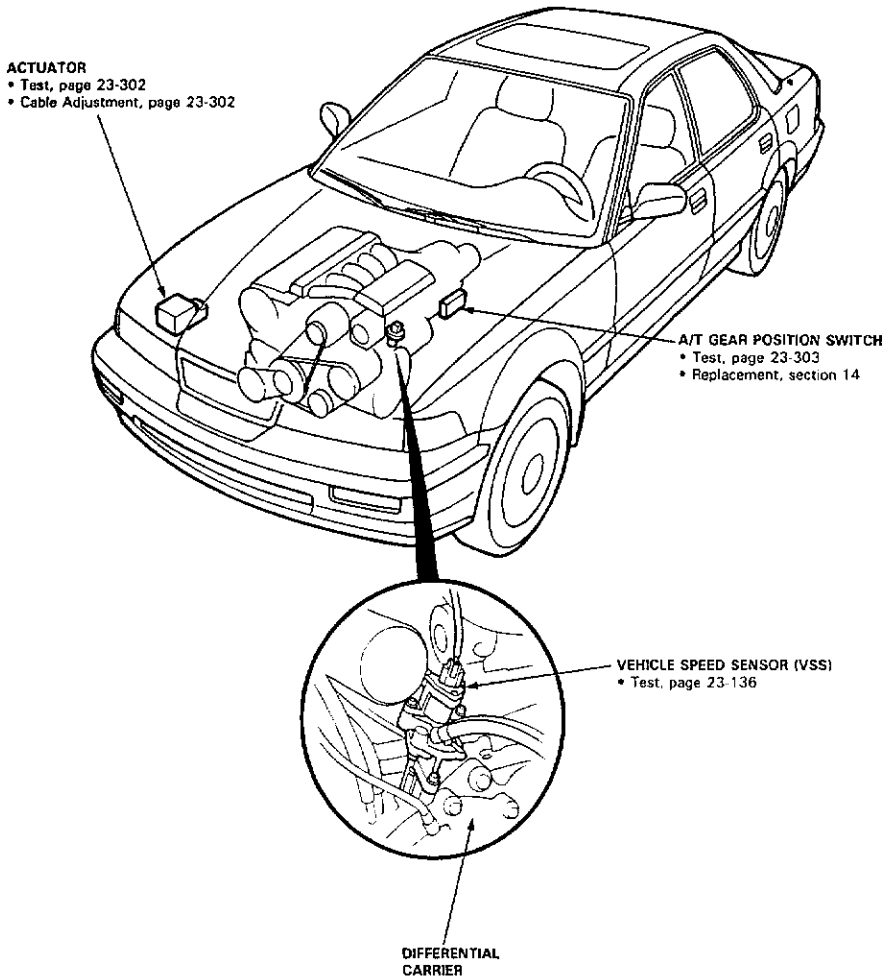

## Description

The cruise control system uses mechanically and electrically operated devices to maintain vehicle speed at a setting selected by the driver.

The cruise control unit receives command signals from the cruise control main switch and the cruise control set/resume/cancel switch. It receives information about operating conditions from the brake switch, ECM, vehicle speed sensor (VSS), clutch switch (with manual transmission), or the A/T gear position switch (with automatic transmission). The cruise control unit sends operational signals to the devices that regulate the throttle position. The throttle position maintains the selected vehicle speed. Essentially, the control unit compares the actual speed of the vehicle to the selected speed. Then, the control unit uses the result of that comparison to open or close the throttle.

The brake switch releases the system's control of the throttle at the instant the driver depresses the brake pedal. The switch sends an electronic signal to the control unit when the brake pedal is depressed; the control unit responds by allowing the throttle to close. The clutch switch (manual transmission) or the A/T gear position switch (automatic transmission) sends a disengage signal input to the control unit that also allows the throttle to close.

**Operation:**
The cruise control system will set and automatically maintain any speed above 25 mph (40 km/h). To set, make sure that the main switch is in the "ON" position. After reaching the desired speed, press the set switch. The cruise control unit will receive a set signal input and, in turn, will actuate the cruise control actuator. When the set switch is depressed and the cruise control system is on, the "cruise light", an indicator in the gauge assembly, will light up. You can cancel the cruise control system by depressing the cancel switch or by pushing the main switch to "OFF". This removes power to the control unit and erases the set speed from memory. If the system is disengaged temporarily by the brake switch, clutch switch, or the A/T gear position switch and vehicle speed is still above 25 mph (40 km/h), press the resume switch. With the resume switch depressed and the set memory retained, the vehicle automatically returns to the previous set speed.
For gradual acceleration without depressing the accelerator pedal, push the resume switch down and hold it there until the desired speed is reached. This will send an acceleration signal input to the control unit. When the switch is released, the system will be reprogrammed for the new speed. To slow the vehicle down, depress the set switch. This will send a deceleration signal input to the control unit, causing the vehicle to coast until the desired speed is reached. When the desired speed is reached, release the set switch. This will reprogram the system for the new speed.



The electrically operated actuator controls the throttle position in the same way as a vacuum operated actuator. The magnetic clutch is part of the safety system and controls acceleration deceleration.

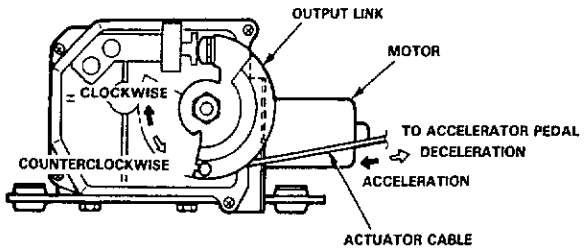


**Acceleration**
Due to the rotation of the motor output shaft, power is transmitted to the magnetic clutch by the transmission gear and the worm wheel. The magnetic clutch is rotated and magnetized. It attracts the clutch plate and power is transmitted to the output link by the gear directly connected to the clutch plate and the output gear. The output link rotates clockwise, then the actuator cable opens the throttle, and the car accelerates.

**Deceleration**
The motor output shaft rotates in reverse direction of acceleration, then, in the same way, the power is transmitted to the output link. The output link rotates counterclockwise, then the actuator cable closes the throttle, and the car decelerates.

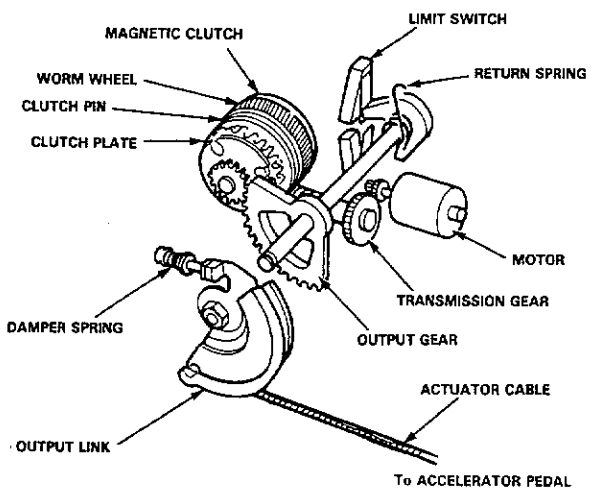

## Circuit Diagram

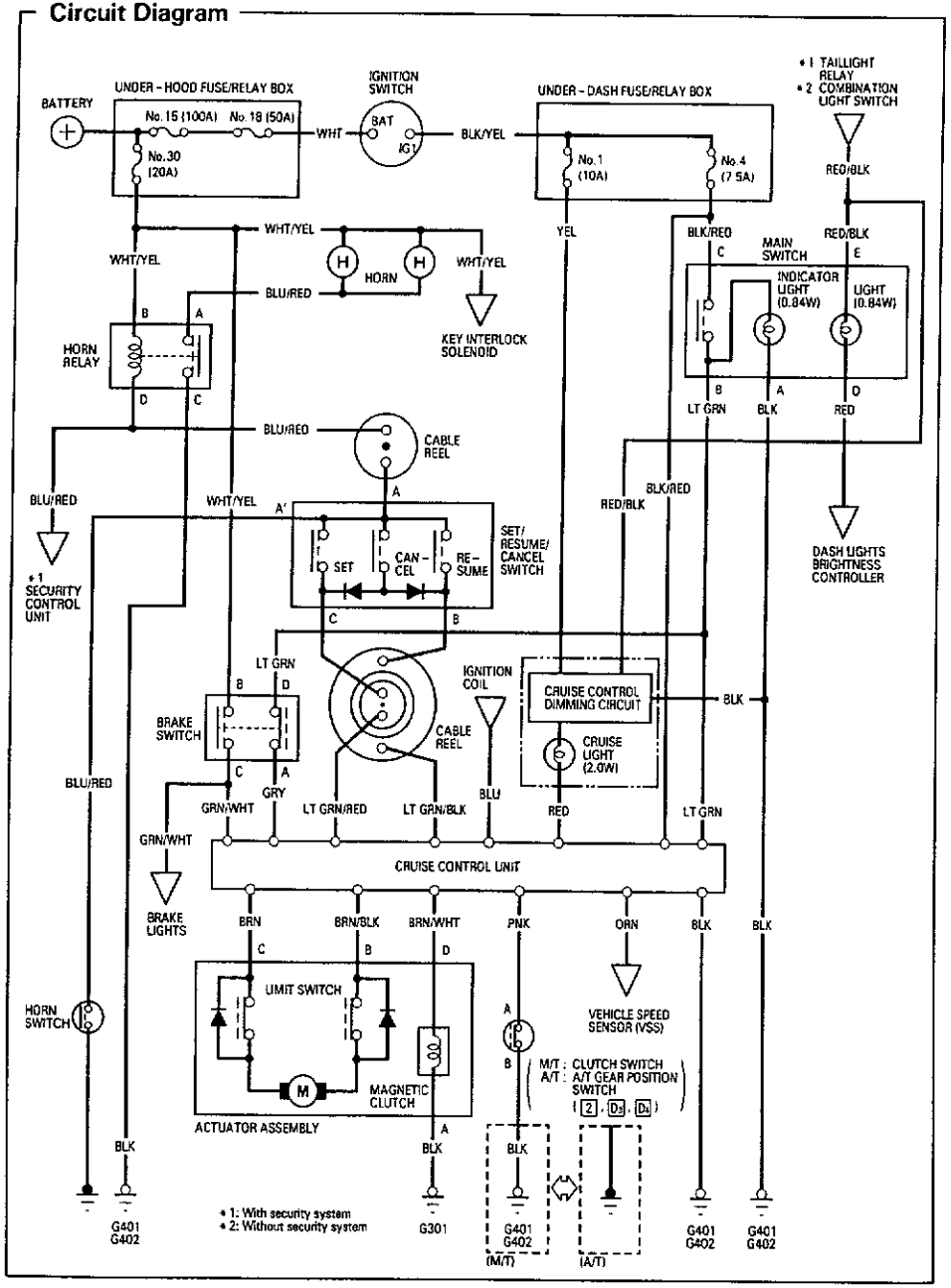




## Troubleshooting

NOTE:
- The numbers in the table show the troubleshooting sequence.
- Before troubleshooting
  - Check the No.1 (10A) and the No.4 (7.5A) fuses in the under-dash fuse/relay box, and the No.15 (100A), No.18 (50A), and the No.30 (20A) fuses in the under-hood fuse/relay box.
  - Check that the horn sound.
  - Check the tachometer to see if it works properly.

| Symptom \ Item to be inspected. | Main switch | SET/RESUME/CANCEL switch | Brake switch and mounting | Clutch switch and mounting (M/T) | A/T gear position switch (A/T) | Vehicle speed sensor (VSS) | Dimming circuit in gauges | Actuator and cable deflection | Control unit | Poor ground | Open circuit in wires, loose or disconnected terminals |
|---|---|---|---|---|---|---|---|---|---|---|---|
| Cruise control can not be set. | 2 | 3 | 4 | 5 | | | | | 1 | G401 G402 | BLU/RED, LT GRN/RED, BLU, BLK/RED, LT GRN, GRY, ORN, BRN, BRN/BLK, BRN/WHT or PNK |
| Cruise control can be set, but indicator light does not go on. | | | | | | | 2 | | 1 | G401, G402 | YEL or RED |
| Cruise speed noticeably higher or lower than what was set. | | | | | | 1 | | 2 | 3 | | |
| Excessive overshooting and/or undershooting when trying to set speed. | | | | | | 2 | | 1 | 3 | | |
| Steady speed not held even on a flat road with cruise control set. | | | | | | 1 | | 2 | 3 | | |
| Car does not decelerate or accelerate accordingly when SET or RESUME button is pushed. | | 1 | | | | | | | 2 | | LT GRN/BLK LT GRN/RED |
| Set speed not cancelled when clutch pedal is pushed (M/T). | | | | 1 | | | | | 2 | | |
| Set speed not cancelled when shift lever is moved to N (A/T). | | | | | 1 | | | | 2 | | |
| Set speed not cancelled when brake pedal is pushed. | | | 1 | | | | | | 2 | | |
| Set speed not cancelled when main switch is pushed OFF. | 1 | | | | | | | | 2 | | |
| Set speed not resumed when RESUME button is pushed (with main switch on, but set speed temporarily cancelled). | | 1 | | | | | | | 2 | | LT GRN/BLK LT GRN/RED |

## Control Unit Input Test

**CAUTION:**
- **All SRS electrical wiring harnesses are covered with yellow outer insulation.**
- **Before disconnecting the SRS wire harness, install the short connector (s) on the airbag (s).**
- **Replace the entire affected SRS harness assembly if it has an open circuit or damaged wiring.**

Disconnectthe 14-P connector from the control unit. Make the following tests at connector terminals.

Inspect the connector terminals to be sure they are all making good contact.

- If the terminals are bent, loose, or corroded, repair them as necessary, and recheck the system.
- If the terminals look OK, make the following input tests at the connector terminals.
  - If any test indicates a problem, find and correct the cause, then recheck the system.
  - If all the input tests prove OK, the control unit must be faulty; replace it.

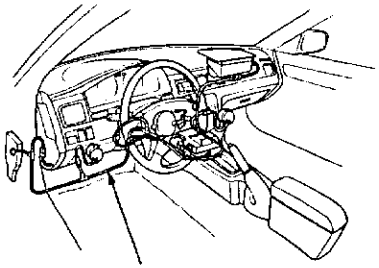


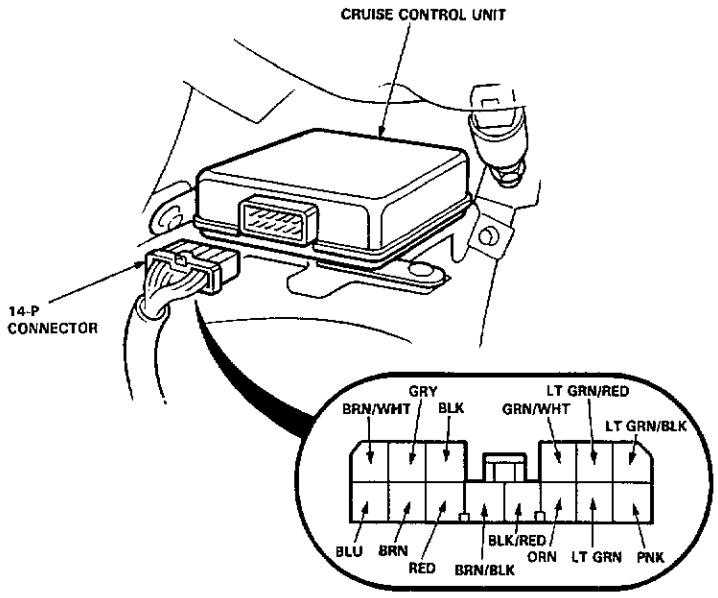


View from wire side



| No. | Wire | Test condition | Test: Desired result | Possible cause if result is not obtained |
|---|---|---|---|---|
| 1 | BLK | Under all conditions. | Check for continuity to gound: There should be continuity. | • Poor Ground (G401, G402)<br>• An open in the wire. |
| 2 | LT GRN | Ignition switch ON and main switch ON. | Check for voltage to ground: There should be battery voltage. | • Blown No. 4 (7.5 A) fuse (in the under-dash fuse/relay box).<br>• Faulty main switch<br>• An open in the wire. |
| 3 | LT GRN/BLK | RESUME button pushed. | Check for voltage to ground: There should be battery voltage. | • Blown No. 30 (20 A) fuse (in the under-hood fuse/relay box).<br>• Faulty SET/RESUME/CANCEL switch.<br>• Faulty horn relay.<br>• Faulty cable reel.<br>• An open in the wire. |
| 4 | LT GRN/RED | SET button pushed. | | |
| 5 | PNK | M/T: Clutch pedal released<br>A/T: Shift lever in 2, D3, or D4. | Check for continuity to ground: There should be continuity.<br>NOTE: There should be no continuity when the clutch pedal is released or when the A/T shift lever is in other positions. | • Faulty or misadjusted clutch switch (M/T).<br>• Faulty A/T gear position switch.<br>• Poor ground (G401, G402).<br>• An open in the wire. |
| 6 | BLU | Start the engine. | Check for voltage to ground: There should be battery voltage. | • Faulty ignition system or ECM.<br>• An open in the wire. |
| 7 | ORN | Ignition switch ON and main switch ON. Raise the front of the car, rotate one wheel slowly. | Check for voltage between the ORN ⊕ and BLK ⊖ terminals: should be 0–5–0–5 V repeatedly. | • Faulty vehicle speed sensor (VSS)<br>• An open in the wire.<br>• Poor ground (G101). |
| 8 | GRY | Ignition switch ON, main switch ON and brake pedal pushed, then released. | Check for voltage to ground: There should 0 V with the pedal pushed and battery voltage with the pedal released. | • Faulty brake switch.<br>• An open in the wire. |
| 9 | GRN/WHT | Brake pedal pushed, then released. | Check for voltage to ground: There should be battery voltage with the pedal pushed, and 0 V with the pedal released. | • Faulty brake switch.<br>• An open in the wire. |
| 10 | RED | Ignition switch ON. | Connect to ground: Cruise indicator in the gauge assembly comes on. | • Blown bulb.<br>• Blown No. 1 (10 A) fuse (in the under-dash fuse/relay box).<br>• Faulty dimming circuit in the gauge assembly.<br>• An open in the wire. |
| 11 | BRN | Connect the battery power to the BRN/WHT terminal and ground to the BRN/BLK terminal. | Check the operation of the actuator motor: You should be able to hear the motor. | • Faulty actuator.<br>• An open in the wire. |
| 12 | BRN/BLK | | | |
| 13 | BRN/WHT | Connect the battery power to the BRN terminal. | Check the operation of the magnetic clutch: Clutch should click and output link should be locked. | • Faulty actuator.<br>• Poor ground (G301).<br>• An open in the wire. |
| 14 | BLK/RED | Ignition switch ON. | Check for voltage to ground: There should be battery voltage. | • Blown No. 4 (7.5 A) fuse (in the under-dash fuse/relay box).<br>• An open in the wire. |

## Main Switch Test

CAUTION:
- All SRS electrical wiring harnesses are covered with yellow outer insulation.
- Before disconnecting the SRS wire harness, install the short connector (s) on the airbag (s).
- Replace the entire affected SRS harness assembly if it has an open circuit or damaged wiring.

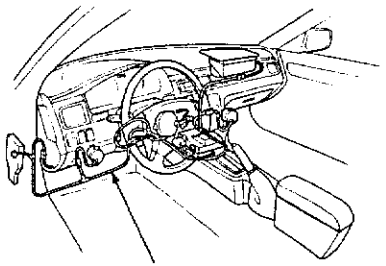


NOTE: Be careful not to damage the main switch and the instrument panel.

1. Carefully pry out the main switch from the instrument panel and disconnect the connector.

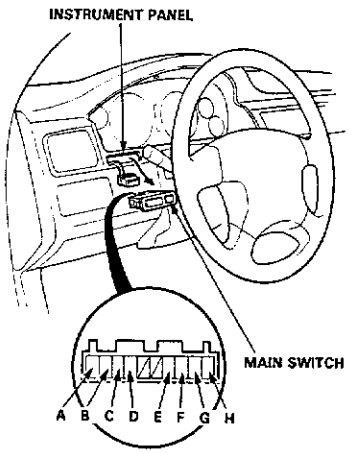


2. Check for continuity between the terminal in each switch position according to the table.

| Terminal / Position | C | B | | A | E | | D |
|---|---|---|---|---|---|---|---|
| OFF | | ○ | ⊖ | ○ | ○ | ⊖ | ○ |
| ON | ○ | ○ | ⊖ | ○ | ○ | ⊖ | ○ |

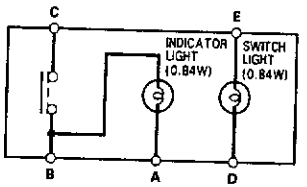


- If there is no continuity, replace the switch.



## Set/Resume/Cancel Switch Test

CAUTION:
- All SRS electrical wiring harnesses are covered with yellow outer insulation.
- Before disconnecting the SRS wire harness, install the short connector (s) on the airbag (s).
- Replace the entire affected SRS harness assembly if it has an open circuit or damaged wiring.

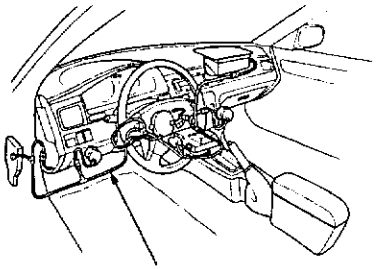


NOTE: The radio may have a coded theft protection circuit. Be sure to get the customer's code number before
- Disconnecting the battery.
- Removing the No. 39 (10 A) fuse in the underhood fuse/relay box.
- Removing the radio.

After service, reconnect power to the radio and turn it on. When the word "CODE" is displayed, enter the customer's 5-digit code to restore radio operation.

1. Disconnect the battery negative cable, and then positive cable.

2. Remove the access panel from the steering wheel, then remove the short connector (RED) from the panel.

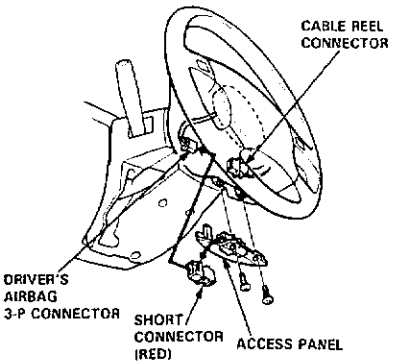


3. Disconnect the connector between the airbag and cable reel, then install the short connector (RED) on the airbag(s).

4. Remove the dashboard lower cover.

5. Disconnect the cable reel 6-P connector from the SRS main harness, then connect Test Harness C only to the cable reel.

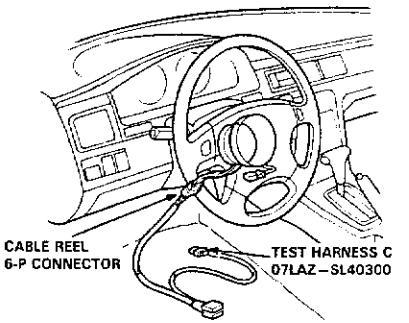


(cont'd)

## Set/Resume/Cancel Switch Test (cont'd)

6. Check for continuity between the terminals of Test Harness C in each switch position according to the table.

| Terminal / Position | 3 | | 2 | 1 |
|---|---|---|---|---|
| SET (ON) | ○ | | ○ | |
| RESUME (ON) | ○ | | | ○ |
| CANCEL (ON) | ○ | ▶ | ○ | |
| | | ▶ | | ○ |

TEST HARNESS C
07LAZ – SL40300

| | | | |
|---|---|---|---|
| 1 | 2 | 3 | 4 |
| 5 | 6 | 7 | 8 |

- If there is continuity, and it matches the table, the switch is OK.
- If there is no continuity in one or both positions, go to step 7.

7. Remove the cover carefully by prying between the cover and the switch in the sequence shown:

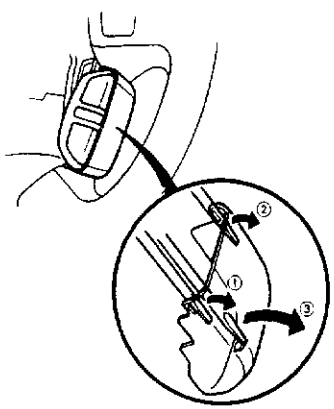


8. Remove the two screws and remove the switch.

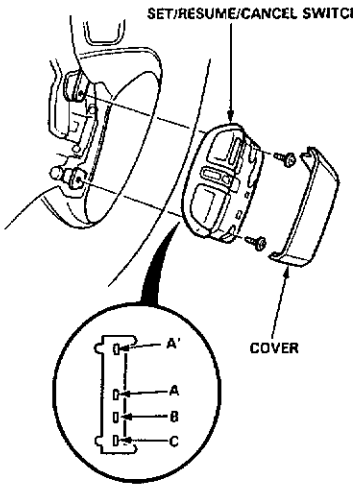


9. Check for continuity between the terminals in each switch position according to the table.

| Terminal / Position | A or A' | | B | C |
|---|---|---|---|---|
| SET (ON) | ○ | | | ○ |
| RESUME (ON) | ○ | | ○ | |
| CANCEL (ON) | ○ | ▶ | | ○ |
| | | ▶ | ○ | |

- If there is no continuity in one or both positions, replace the switch.
- If there is continuity and it matches the table, replace the cable reel.



## Brake Switch Test

1. Disconnect the 4-P connector from the brake switch.
2. Check for continuity between the terminals according to the table.

| Terminal / Brake pedal | A | B | C | D |
|---|---|---|---|---|
| RELEASED | ○ | | | ○ |
| PUSHED | | ○ | ○ | |

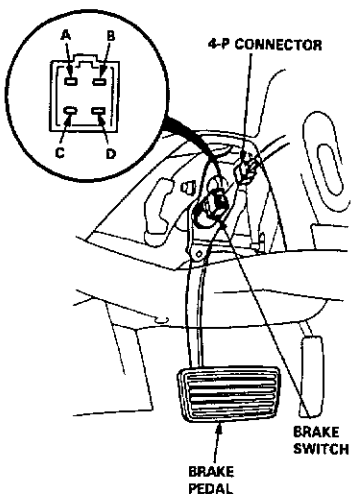


3. If necessary, replace the switch or adjust pedal height (see section 12).

## Clutch Switch Test (M/T)

1. Disconnect the 2-P connector from the switch.
2. Check for continuity between the terminals according to the table.

| Terminal / Clutch pedal | A | B |
|---|---|---|
| RELEASED | ○ | ○ |
| PUSHED | | |

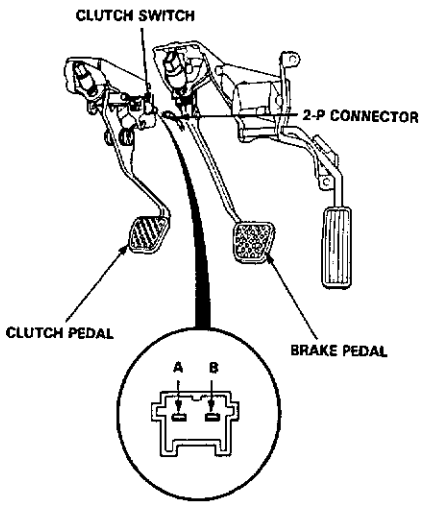


3. If necessary, replace the switch or adjust pedal height (see section 12).

## Actuator Assembly Test

1. Disconnect the 4-P connector from the actuator.
2. Check the output linkage for smooth movement.
3. Connect battery power to the D terminal and ground to the A terminal.
4. Check for a clicking sound from the magnetic clutch. The output linkage should be locked.
5. If the output linkage is not locked, replace the actuator assembly.

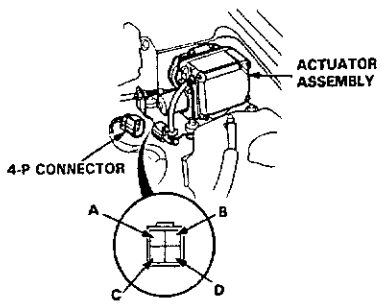

View from terminal side

6. Check the operation of the actuator motor in each output linkage position according to the table. You should be able to hear the motor.

| Battery polarities | | Output linkage position | | |
|---|---|---|---|---|
| ⊕ | ⊖ | FULL CLOSE | MIDDLE POSITION | FULL OPEN |
| C Terminal | B Terminal | The motor runs | The motor runs | The motor stops |
| B Terminal | C Terminal | The motor stops | The motor runs | The motor runs |

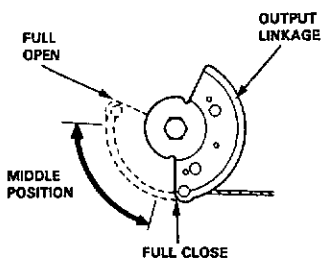


## Actuator Cable Adjustment

1. Check that the actuator cable operates smoothly with no binding or sticking
2. Start the engine and warm it up to normal operating temperature (the radiator fan comes on twice).
3. Measure how far the output linkage moves from the fully closed position before. Free play should be 11 ± 1.5 mm (0.43 ± 0.06 in).

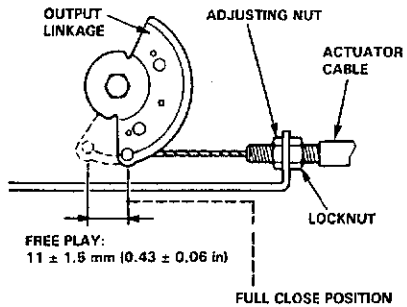


4. If the free play is not within specs, loosen the locknut and turn the adjusting nut as required.

   NOTE: If necessary, check the throttle control system (see section 11), then recheck the output linkage free play.

5. Retighten the locknut and recheck the free play.

## A/T Gear Position Switch Test

1. Disconnect the 14-P connector from the A/T gear position switch.
2. Check for continuity between the terminals in each position according to the table and confirm that there is continuity only in position [2], [D3], and [D4].

| Position \ Terminal | Body Ground | 11 |
|---|---|---|
| [1] | | |
| [2] | ○ | ○ |
| [D3] | ○ | ○ |
| [D4] | ○ | ○ |
| [N] | | |
| [R] | | |
| [P] | | |

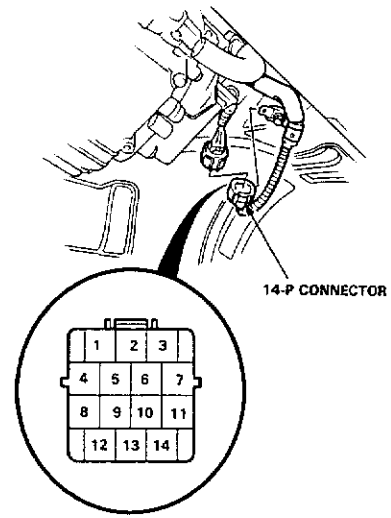

View from terminal side

3. If necessary, replace the A/T gear position switch.

# Security Alarm System

## Wiring Locations

CAUTION:
- All SRS electrical wiring harnesses are covered with yellow outer insulation.
- Before disconnecting the SRS wire harness, install the short connector (s) on the airbag (s).
- Replace the entire affected SRS harness assembly if it has an open circuit or damaged wiring.

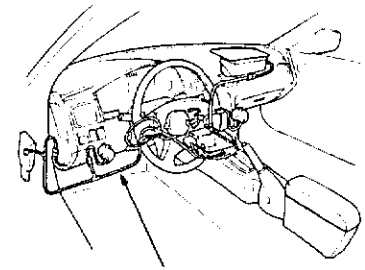


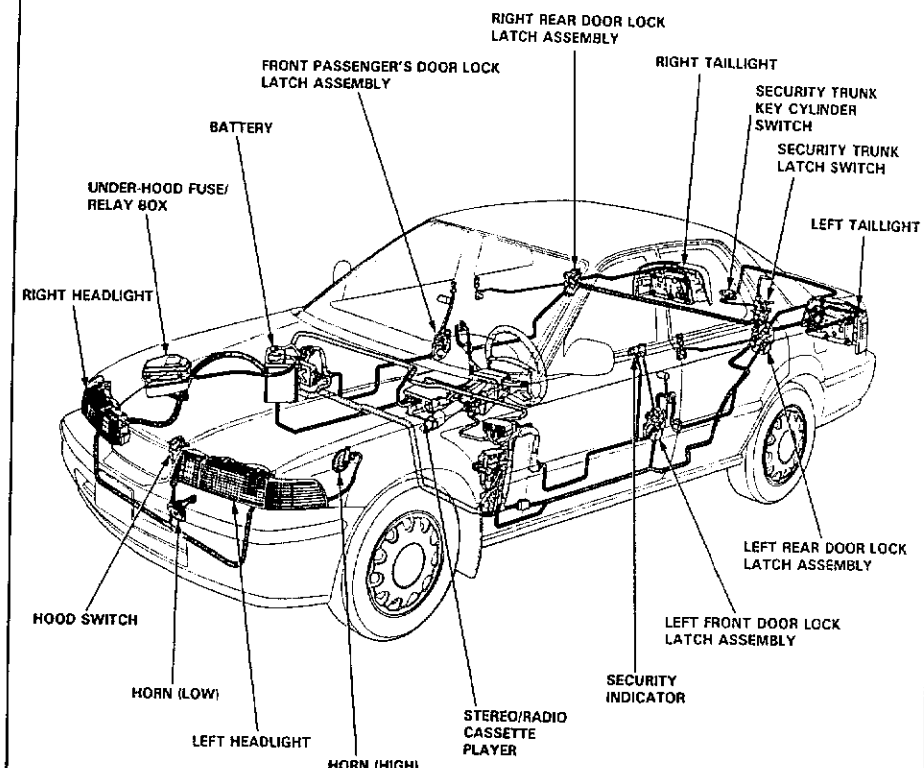

# Security Alarm System

## Component Location Index

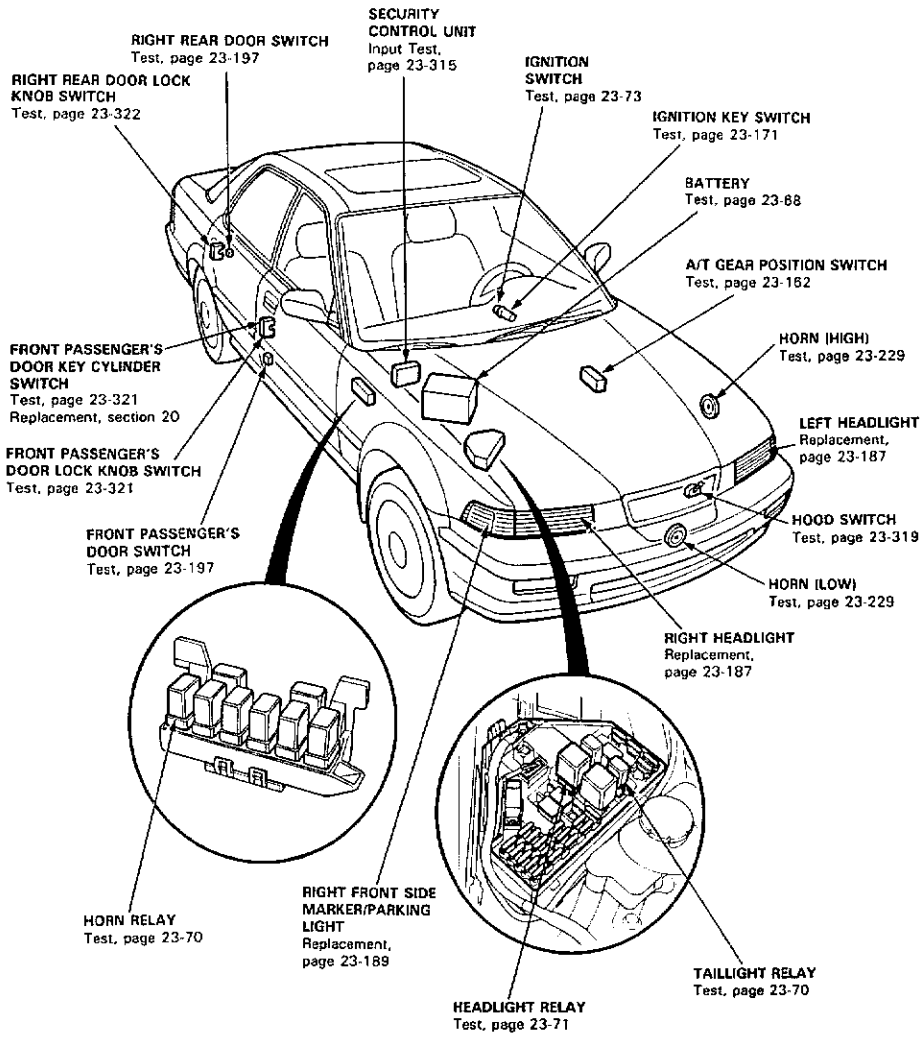




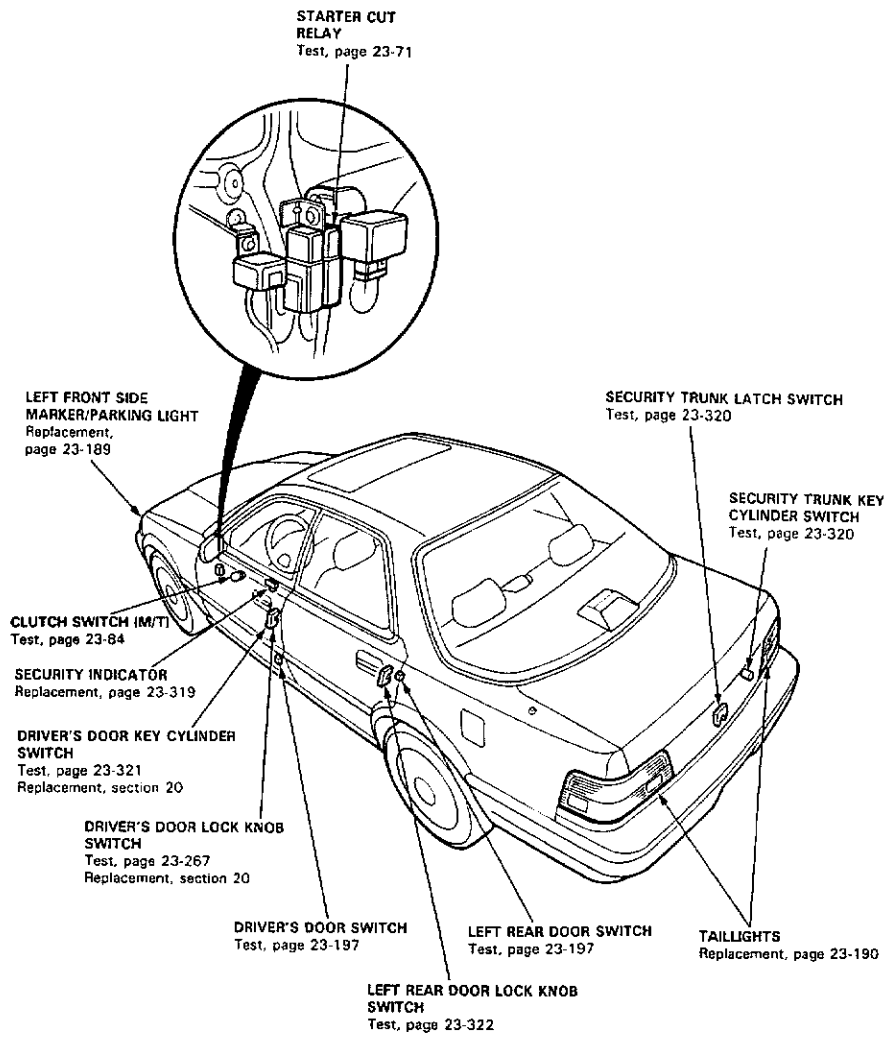

# ecurity Alarm System

## Description

This system is activated automatically 15 seconds after everything has been closed and locked. The security alarm system indicator light located on the driver's side door panel will flash after the doors are properly locked.
If any of the following conditions occur, the horns will sound, the headlights will flash, and the side marker lights, parking lights and taillights will flash for about two minutes, or until the system is disarmed by unlocking either door from the outside with the key.

① Door is opened forcibly.
② Trunk lid is opened without using the key.
③ Hood is opened.
④ Battery terminals are removed and reconnected
⑤ Engine starter circuit and battery circuit are bypassed by breaking the ignition switch.
⑥ Hood/trunk lid opener in the vehicle is operated.

Flowchart of the security alarm system operation:

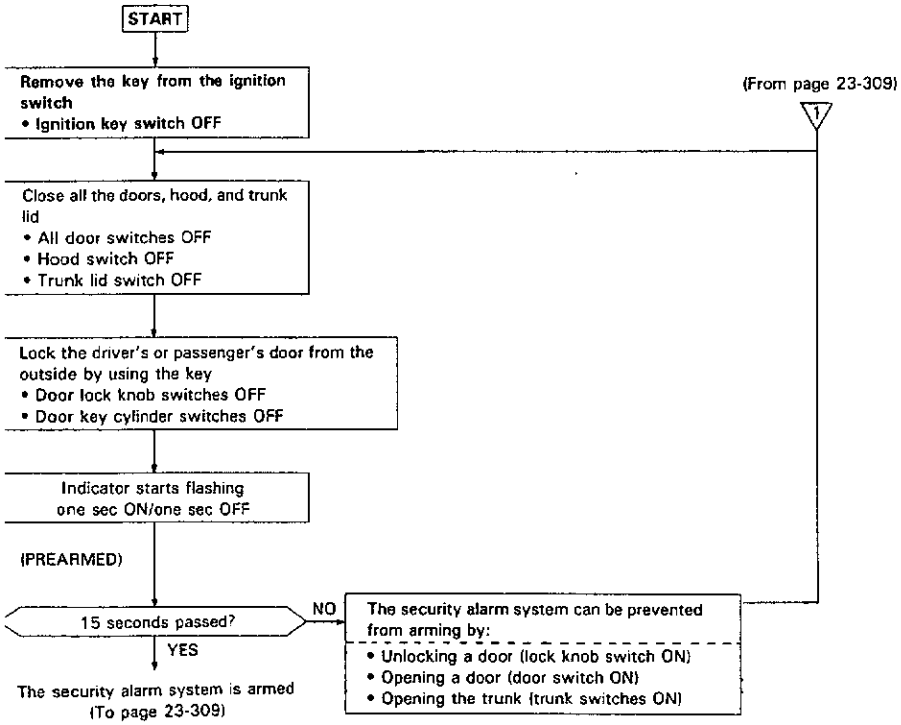




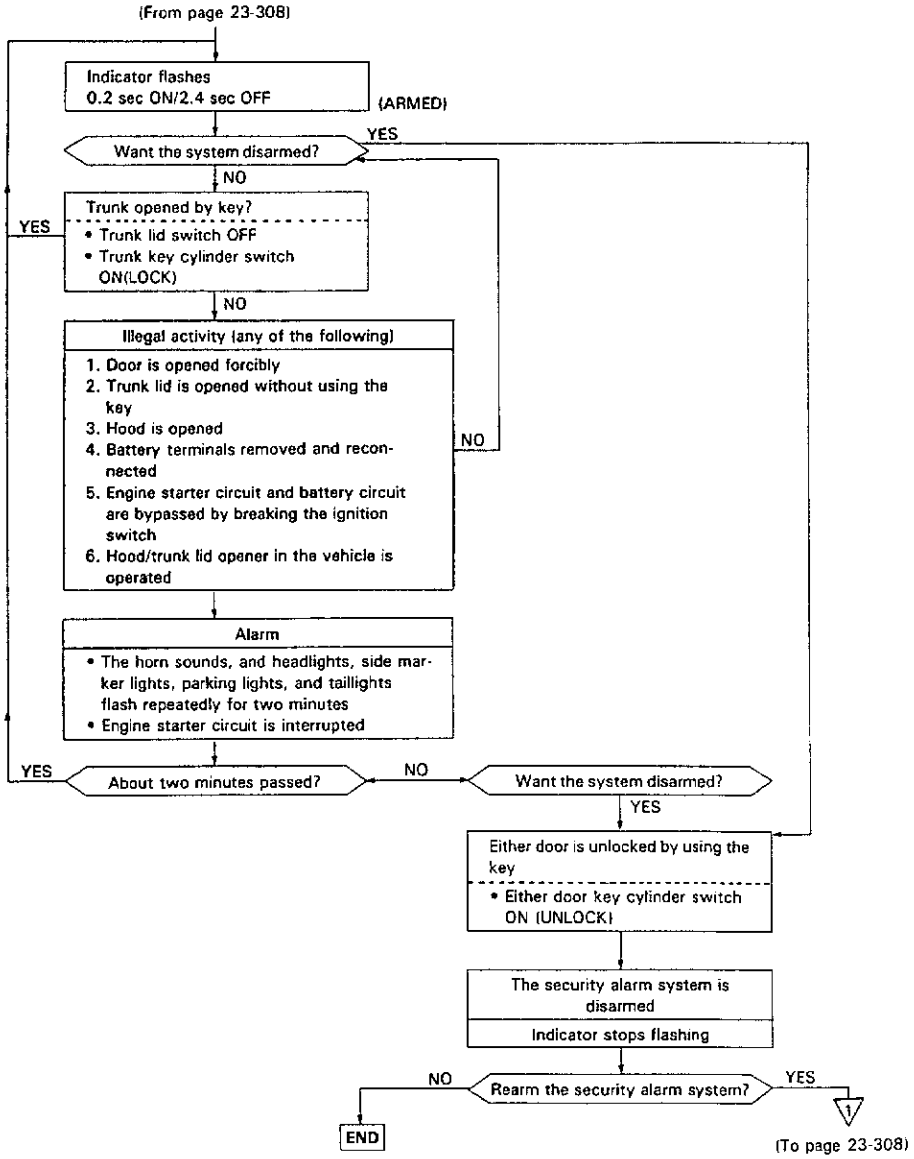

# ecurity Alarm System

## Circuit Diagram (USA)

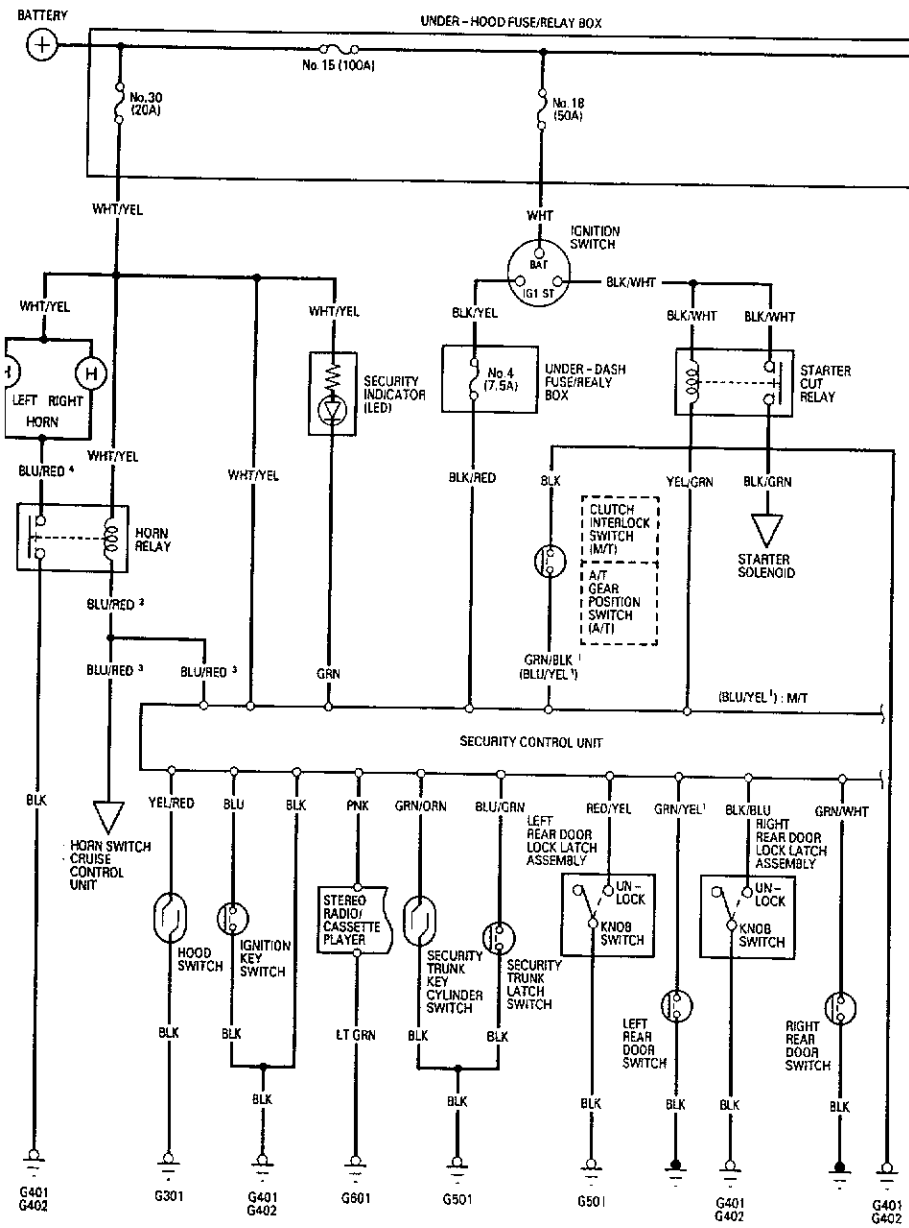


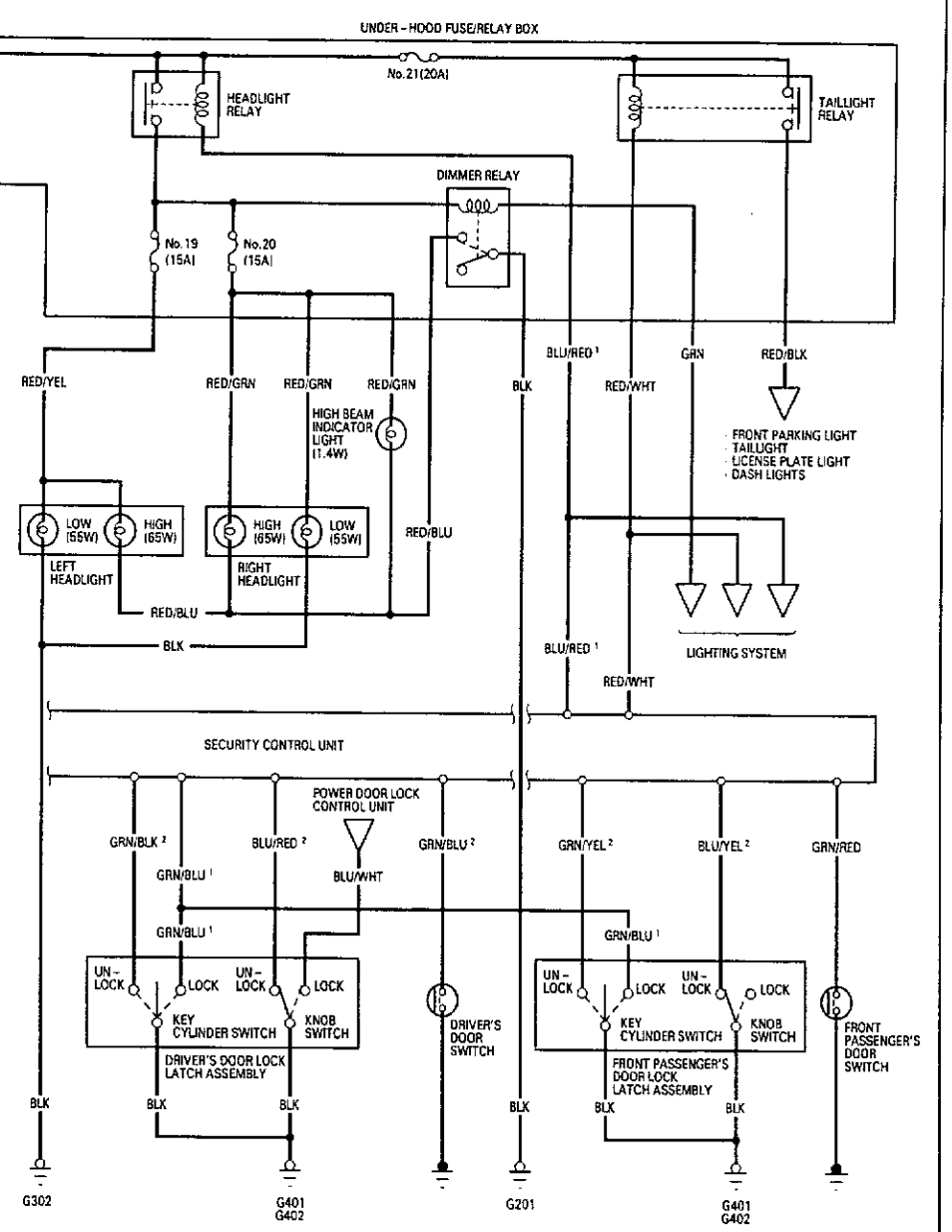

# Security Alarm System

## Circuit Diagram (Canada)

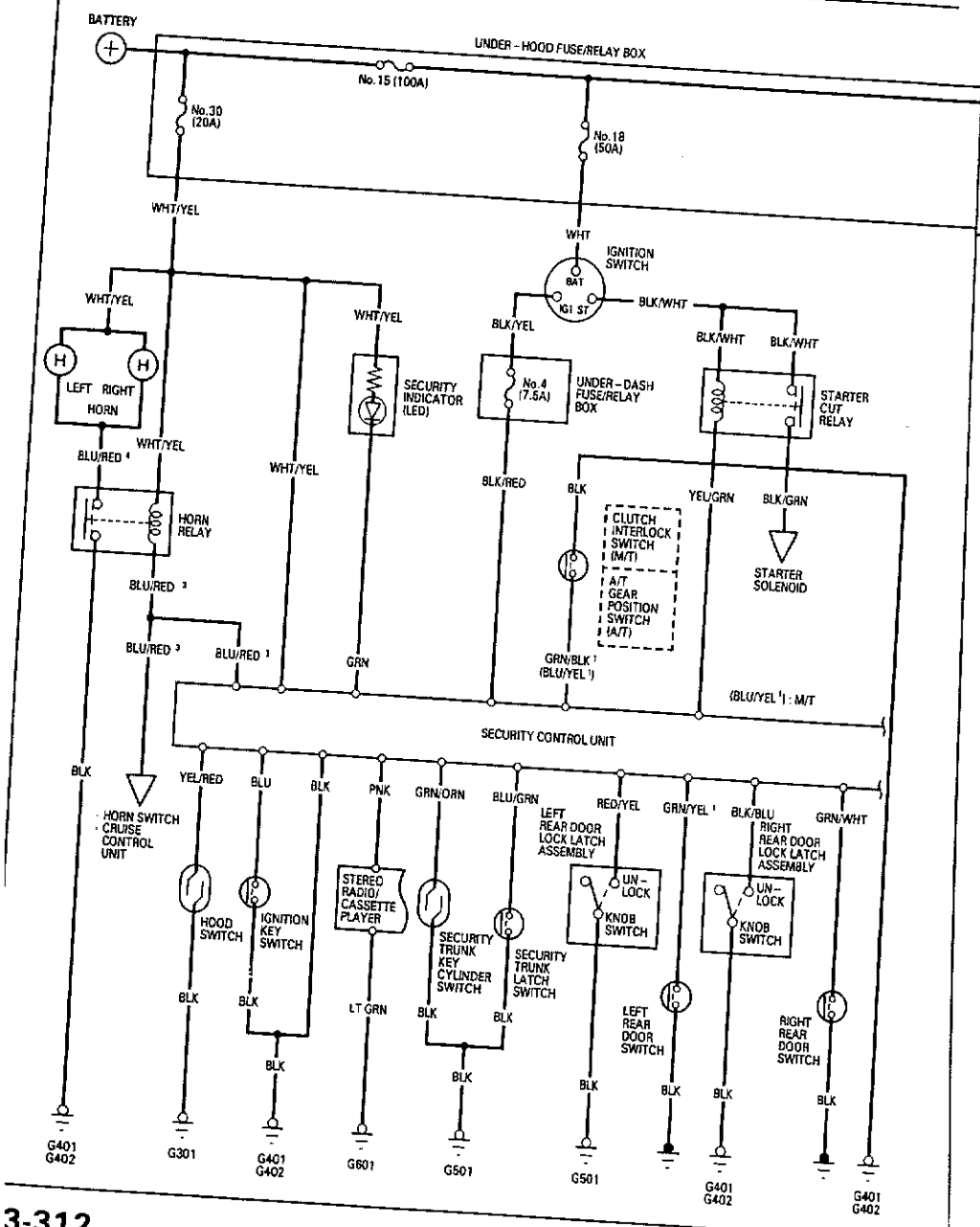




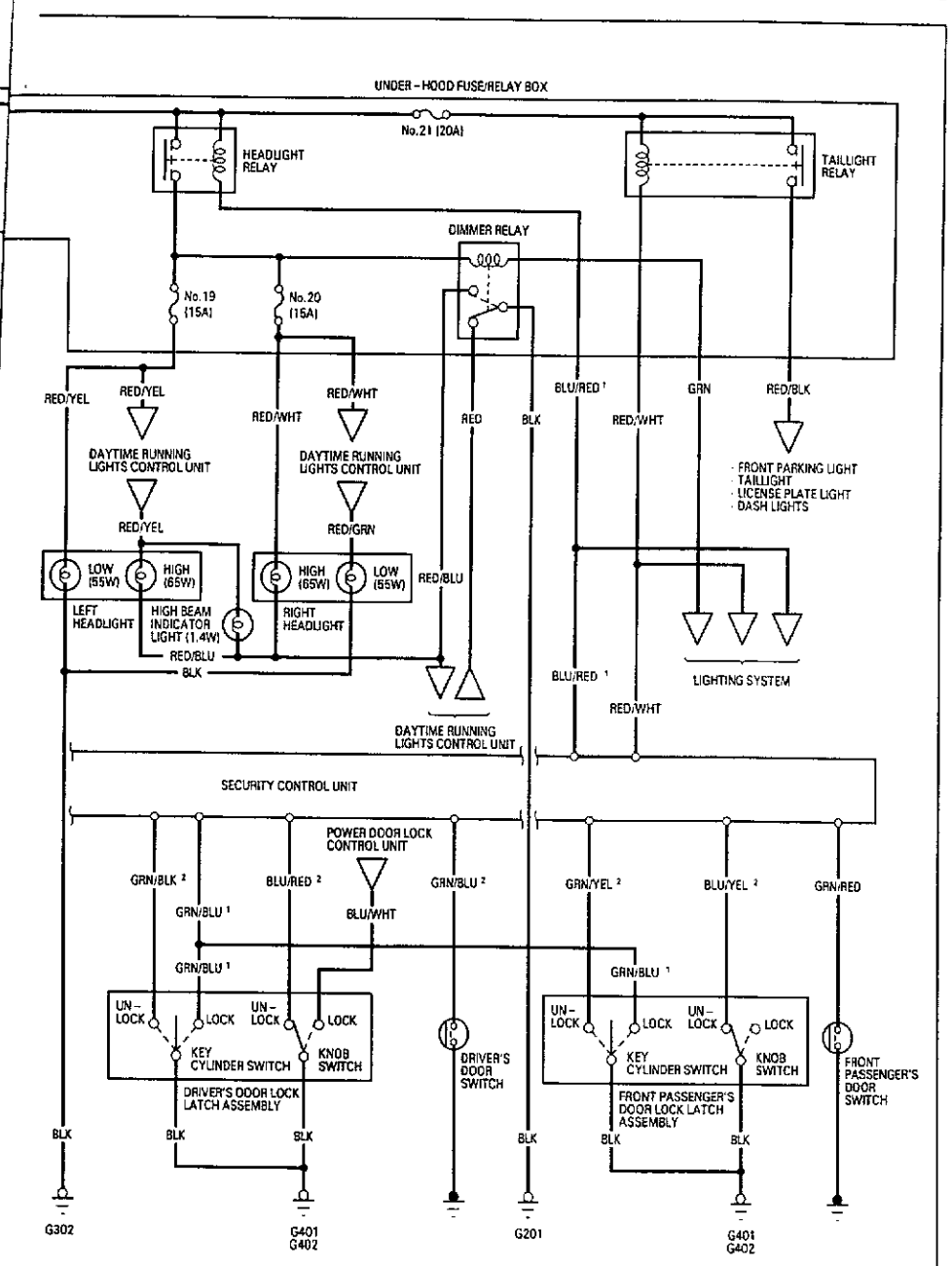

# Security Alarm System

## Troubleshooting

NOTE: The numbers in the table show the troubleshooting sequence.

| Symptom \ Item to be inspected | | Blown No. 30 (20 A) fuse (in the under-hood fuse/relay box) | Blown No. 4 (7.5 A) fuse (in the under-dash fuse/relay box) | Faulty indicator light (LED) | Horn circuit | Starting system | A/T: A/T gear position switch M/T: Clutch interlock switch | Lighting sytem | Door key switch | Ignition key switch | Security trunk key cylinder switch | Security trunk latch switch | Hood switch | Door switch | Security control unit input | Poor ground | Open circuit in wires, loose or disconnected terminals |
|---|---|---|---|---|---|---|---|---|---|---|---|---|---|---|---|---|---|
| Security alarm can't be set (and indicator light does not flash). | | 1 | 2 | 3 | | | | | | 4 | | | | | | G401 G402 | WHT/YEL, BLK/RED GRN, or BLU |
| Starting system does not operate. | | | | | | 1 | 2 | | | | | | | | 3 | G401 G402 | BLK/WHT, *GRN/BLK[1], YEL/GRN or *[1]BLU/YEL[1] |
| Security alarm can be set, but alarm does not operate when the trunk, hood or either door is unlocked without the key. | Horn alarm | 1 | | | 2 | | | | | | | | | | 3 | | WHT/YEL, BLU/RED[3], or BLU/GRN |
| | Headlight alarm | | | | | | | 1 | | | | | | | 2 | | BLU/RED[1] or RED/WHT |
| | Both alarms | | | | | | | | | | | | | | 1 | | |
| Alarm not cancelled when the door is opened with the key. | | | | | | | | | 1 | | | | | | 2 | G401 G402 | BLU/RED[1], GRN/YEL[2], GRN/BLK[2], or BLU/RED[3] |
| Alarm not cancelled when the key is inserted in the ignition switch. | | | 1 | | | | | | | 2 | | | | | 3 | | BLK/RED or BLU |
| Alarm not cancelled when the trunk lid is opened with the key. | | | | | | | | | | | 1 | 2 | | | 3 | G501 | GRN/ORN or BLU/GRN |
| Alarm does not operate when the hood is opened. | | | | | | | | | | | | | 1 | | 2 | G301 | YEL/RED |
| Alarm does not operate when the door is opened. | | | | | | | | | | | | | | 1 | 2 | G401 G402 | GRN/YEL[1], GRN/WHT, GRN/BLU[2] or GRN/RED |

: A/T
1: M/T



## Control Unit Input Test

**CAUTION:**
- **All SRS electrical wiring harnesses are covered with yellow outer insulation.**
- **Before disconnecting the SRS wire harness, install the short connector (s) on the airbag (s).**
- **Replace the entire affected SRS harness assembly if it has an open circuit or damaged wiring.**

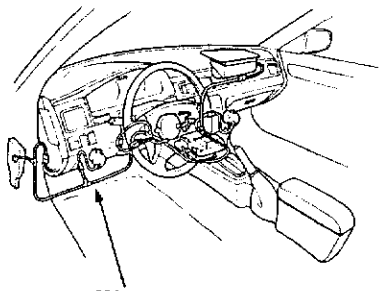


Remove the glove box. Disconnect the 12-P and 18-P connectors from the security control unit. Inspect the connector terminals to be sure they are all making good contact.

- If the terminals are bent, loose, or corroded, repair them as necessary, and recheck the system.
- If the terminals look OK, make the following input tests at the connector terminals.
  - If any test indicates a problem, find and correct the cause, then recheck the system.
  - If all the input tests prove OK, the control unit must be faulty; replace it.

NOTE: Remove the No.37 (15 A) fuse from the under-hood fuse/relay box.

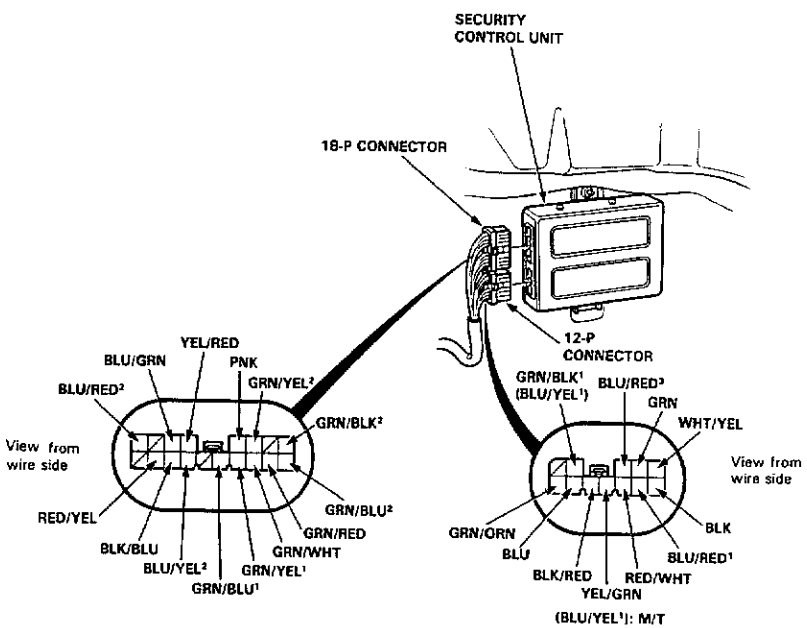


(cont'd)

# Security Alarm System

## Control Unit Input Test (cont'd)

| No. | Wire | Test condition | Test: Desired result | Possible cause if result is not obtained |
|---|---|---|---|---|
| 1 | BLK | Under all conditions. | Check for continuity to ground: There should have continuity. | • Poor ground (G401, G402).<br>• An open in the wire. |
| 2 | WHT/YEL | Under all conditions. | Check for voltage to ground: There should be battery voltage. | • Blown No. 30 (20 A) fuse (in the under-hood fuse/relay box).<br>• An open in the wire. |
| 3 | GRN | Ignition switch ON. | Connect to ground: Security indicator should come on. | • Blown No. 30 (20 A) fuse (in the under-hood fuse/relay box).<br>• Faulty security indicator.<br>• An open in the wire. |
| 4 | BLK/RED | Ignition switch ON. | Check for voltage to ground: There should be battery voltage. | • Blown No.4 (7.5 A) fuse (in the under-dash fuse/relay box).<br>• An open in the wire. |
| 5 | YEL/GRN | Ignition switch at START. | Check for voltage to ground: There should be battery voltage. | • Fualty starter cut relay.<br>• An open in the wire. |
| 6 | BLU/RED[3] | Under all conditions. | Connect to ground: All horns should sond. | • Blown No. 30 (20 A) fuse (in the under-hood fuse/relay box).<br>• Faulty horn relay.<br>• Either horn faulty.<br>• Poor ground (G401, G402)<br>• An open in the wire. |
| 7 | BLU/RED[1] | Under all conditions. | Connect to ground: Headlights should come on. | • Faulty headlight relay.<br>• Faulty headlight system.<br>• An open in the wire. |
| 8 | RED/WHT | Under all conditions. | Connect to ground: taillights shoud come on. | • Faulty taillight relay.<br>• Faulty taillight system.<br>• An open in the wire. |



| No. | Wire | Test condition | Test: Desired result | Possible cause if result is not obtained |
|---|---|---|---|---|
| 9 | GRN/BLK (BLU/YEL[2]) | Ignition switch On and; (M/T): clutch pedal pushed (A/T): A/T gear position P. | Check for continuity to ground: There should be continuity. | • Faulty clutch interlock switch (M/T).<br>• Faulty A/T gear position switch (A/T).<br>• An open in the wire. |
| 10 | YEL/RED | Hood open. | Check for continuity to ground. There should be continuity. | • Faulty hood switch (Misadjusted hood switch).<br>• Poor ground (G301).<br>• An open in the wire. |
| | | Hood closed. | Check for continuity to ground: There should be no continuity | |
| 11 | BLU | Ignition key is inserted into the ignition switch. | Check for continuity to ground: There should be continutiy. | • Faulty ignition key switch.<br>• Poor ground (G401, G402).<br>• An open in the wire. |
| | | Ignition key is removed from the ignition switch. | Check for continuity to ground: There should be no continuity. | |
| 12 | PNK | Under all conditions. | Check for continuity to ground. There should be continuity. | • Poor ground (G601).<br>• An open in the wire. |
| 13 | GRN/ORN | Trunk key in UNLOCK. | Check for continuity to ground: There should be continuity. | • Faulty security trunk key cylinder swtich.<br>• Poor ground (G501).<br>• An open in the wire. |
| | | Trunk key in neutral position. | Check for continuity to ground: There should be no continuity. | • Faulty security trunk key cylinder switch.<br>• Short to ground. |
| 14 | BLU/GRN | Trunk lid open. | Check for continuity to ground: There should be continuity. | • Faulty security trunk latch switch. (Misadjusted security trunk latch switch).<br>• Poor ground (G501).<br>• An open in the wire. |
| | | Trunk lid closed. | Check for continuity to ground: There should be no continuity. | |

(BLU/YEL[1]): M/T

(cont'd)

## Control Unit Input Test (cont'd)

| No. | Wire | Test condition | Test: Desired result | Possible cause if result is not obtained |
|---|---|---|---|---|
| 15 | GRN/BLU[2] | Driver's door opened. | Check for continuity to ground: When the door is opened, there should be continuity, and when the door is closed, there should be no continuity. | • Faulty driver's door or front passenger's door switches.<br>• An open in the wire. |
| | | Driver's door closed. | | |
| 16 | GRN/RED | Front passenger's front door opened. | | |
| | | Front passenger's door closed. | | |
| 17 | GRN/YEL[1] | Left rear door opened. | Check for continuity to ground: When the door is opened, there should be continuity, and when the door is closed, there should be no continuity. | • Faulty left rear door or right rear door switches.<br>• An open in the wire. |
| | | Left rear door closed. | | |
| 18 | GRN/WHT | Right rear door opened. | | |
| | | Right rear door closed. | | |
| 19 | GRN/BLK[2] | Driver's door key in UNLOCK. | Check for continuity to ground: There should be continuity. | • Faulty driver's door or front passenger's door key switches.<br>• Poor ground (G401, G402)<br>• An open in the wire. |
| 20 | GRN/TEL[2] | Front passenger's front door key in UNLOCK. | | |
| 21 | GRN/BLU[1] | Driver's door key in LOCK. | Check for continuity to ground: There should be continuity, as the door keylock is turned in LOCK. | • Faulty driver's door or front passenge's door key switches.<br>• Poor ground (G401, G402).<br>• An open in the wire. |
| | | Front passenger's front door key in LOCK. | | |
| 22 | BLU/RED[2] | Driver's door lock knob in UNLOCK. | Check for continuity to ground: There should be continuity. | • Faulty driver's door lock knob switch (Built in the actuator).<br>• Poor ground (G401, G402)<br>• An open in the wire. |
| 23 | BLU/YEL[2] | Front passenger's front door lock knob in UNLOCK. | Check for continuity to ground: There should be continuity. | • Faulty front passenger's door lock knob switch (Built in the actuator).<br>• Poor ground (G401, G402).<br>• An open in the wire. |
| 24 | RED/YEL | Left rear door lock knob in UNLOCK. | Check for continuity to ground: There should be continuity. | • Faulty left rear door lock knob switch (Built in the actuator).<br>• Poor ground (G501).<br>• An open in the wire. |
| 25 | BLK/BLU | Right rear door lock knob in UNLOCK. | Check for continuity to ground: There should be continuity. | • Faulty right rear door lock knob switch (Built in the actuator).<br>• Poor ground (G401, G402).<br>• An open in the wire. |



## Security Indicator Test/Replacement

1. Remove the door panel (see section 20).
2. Remove the screw from the security indicator.
3. Remove the security indicator from the door panel.

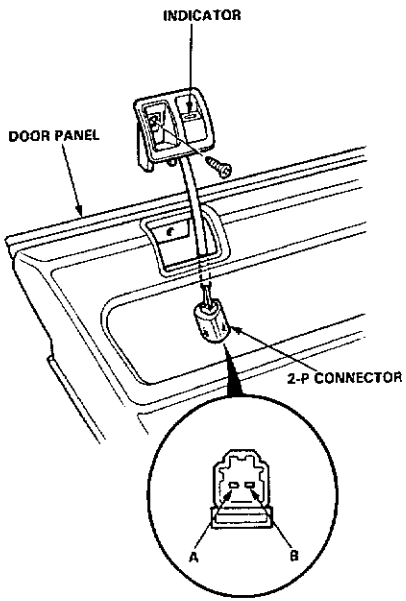


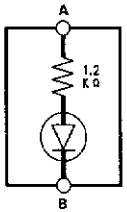


4. Test the security indicator by connecting battery power to the A terminal, and ground to the B terminal.
5. If the security indicator does not come on, replace it.

## Hood Switch Test/Replacement

1. Open the hood.
2. Disconnect the 2-P connector from the hood switch.
3. Check for continuity between the terminals in each switch position according to the table.

| Terminal / Position | A | B |
|---|---|---|
| Hood open (Lever released) | ○ | ○ |
| Hood closed (Lever pushed down) | | |

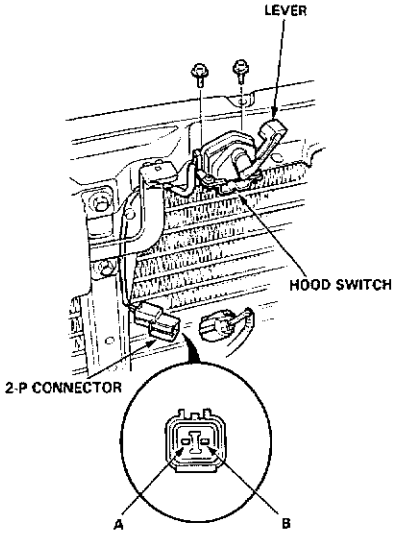

# Security Alarm System

## Security Trunk Latch Switch Test

1. Open the trunk lid and remove the trunk rear trim panel.
2. Disconnect the 2-P connector from the security trunk latch switch.
3. There should be continuity between the A and B terminals with the trunk lid opened.

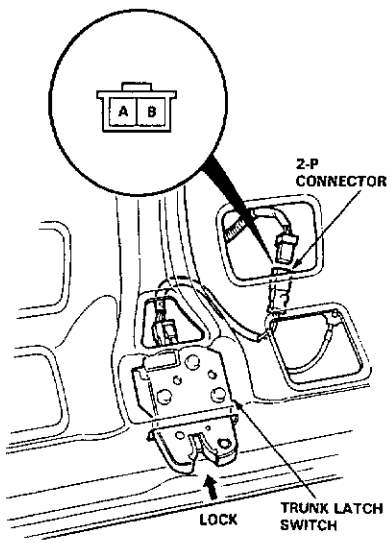


4. There should be no continuity with the trunk latch in Lock (trunk lid closed) position.

## Security Trunk Key Cylinder Switch Test

1. Open the trunk lid and remove the trunk rear trim panel.
2. Disconnect the 2-P connector from the security trunk key cylinder switch.
3. There should be continuity between the A and B terminals when the trunk keylock is turned to UNLOCK with the key.
   There should be no continuity when the keylock is released.

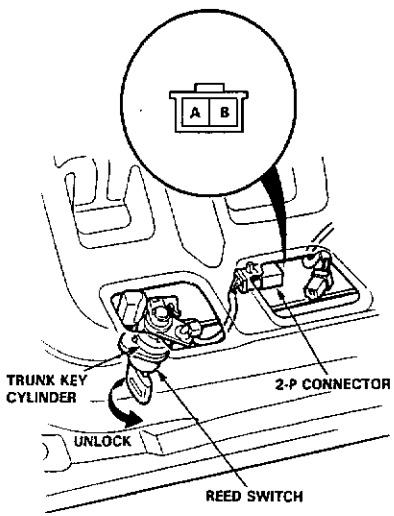


## Door Key Cylinder Switch Test

1. Remove the door panel.
2. Disconnect the 8-P connector from the latch assembly.

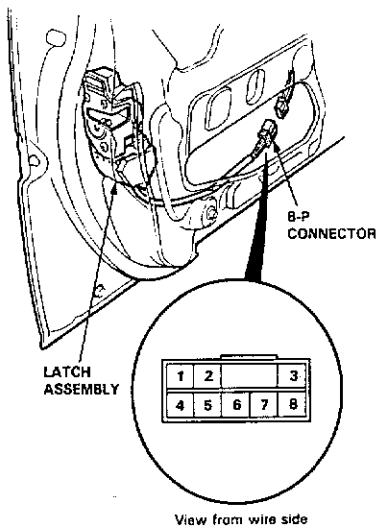


3. Check for continuity between the terminals in each switch position according to the table.

| Position \ Terminal | 1 | 2 | 3 |
|---|---|---|---|
| LOCK (Driver's door only) | | ○ | ○ |
| UNLOCK | ○ | ○ | |

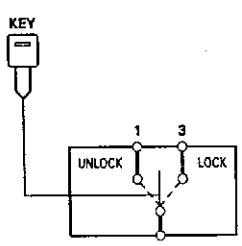


## Front Passenger's Door Lock Knob Switch Test

1. Remove the door panel.
2. Disconnect the 8-P connector from the latch assembly.

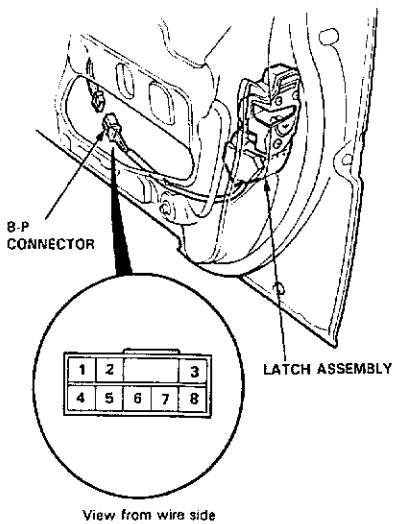


3. Check for continuity between the terminals in each switch position according to the table.

| Position \ Terminal | 4 | 5 |
|---|---|---|
| LOCK | | |
| UNLOCK | ○ | ○ |

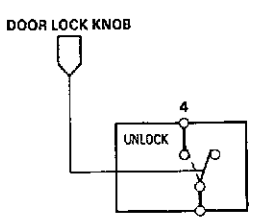

## Rear Door Lock Knob Switch Test

1. Remove the door panel.
2. Disconnect the 4-P connector from the actuator.

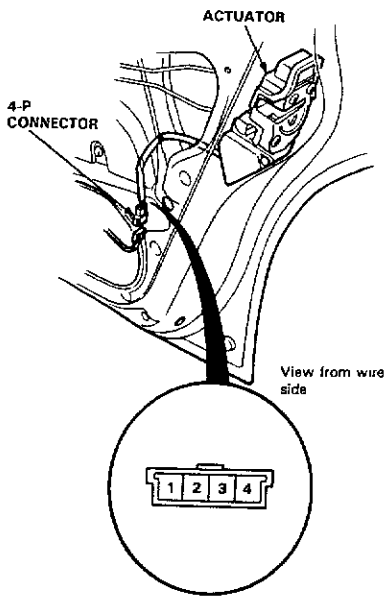


3. Check for continuity between the terminals in each switch position according to the table.

| Terminal / Position | 1 | 2 |
|---|---|---|
| LOCK | | |
| UNLOCK | ○ | ○ |

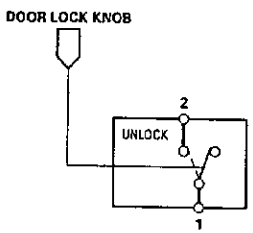




# Supplemental Restraint System (SRS)

Component Location Index ..... 23-324
Description ..... 23-325
Circuit Diagram ..... 23-326
Wiring Locations ..... 23-328
Precautions/Procedures ..... 23-329
Troubleshooting ..... 23-334
Airbag Assembly
  Replacement ..... 23-354
  Disposal ..... 23-358
Cable Reel
  Replacement ..... 23-360
Dash Sensor
  Replacement ..... 23-364
SRS Unit
  Replacement ..... 23-366

# Supplemental Restraint System (SRS)

## Component Location Index

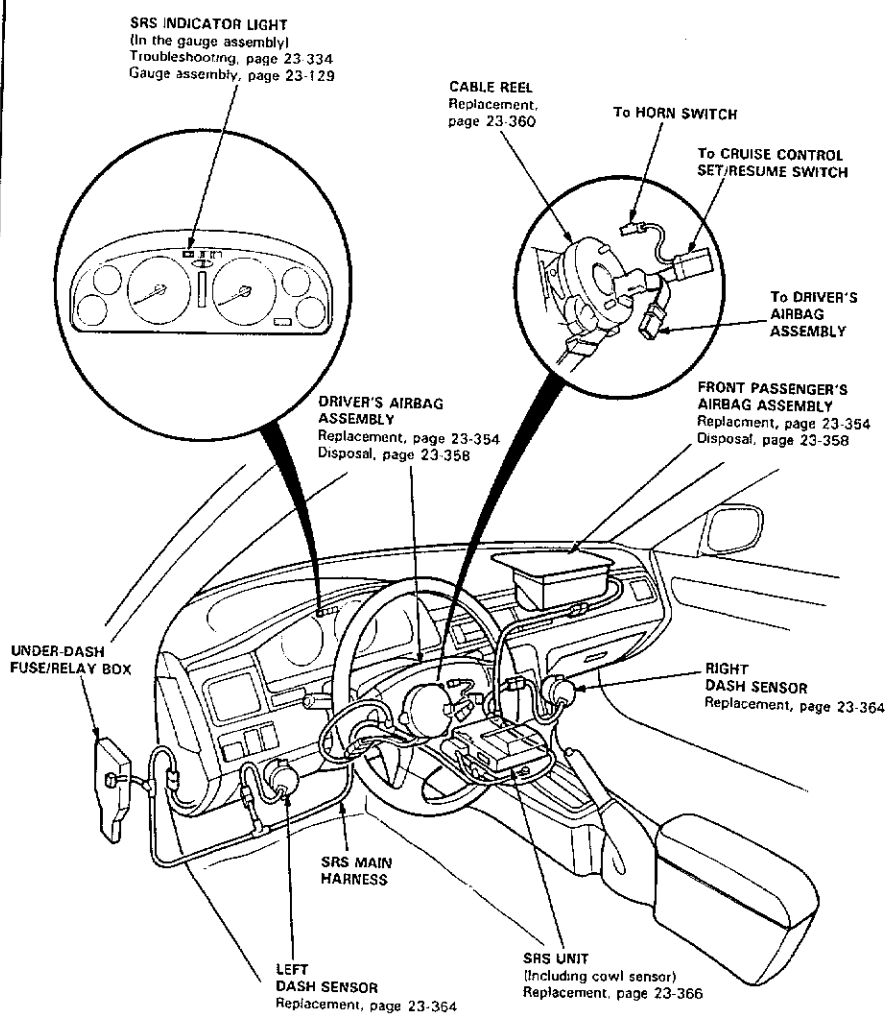






## Description

The SRS is a safety device which, when used in conjunction with the seat belt, is designed to help protect the driver (and front passenger) in a frontal impact exceeding a certain set limit.
The system consists of left and right dash sensors, the SRS unit (includes cowl sensor), the cable reel, driver's airbag and front passenger's airbag (GS model).

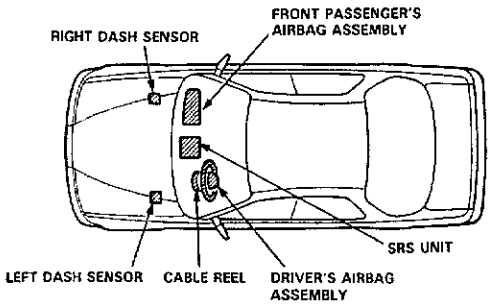


**Operation**
As shown in the diagram below, the left and right dash sensors are connected in parallel. The parallel set of sensors is connected in series to each airbag inflator circuit and the car battery. In addition, a back-up power circuit is connected in parallel with the car battery. The back-up power circuit and the cowl sensor are located inside the SRS unit.

**For the SRS to operate:**
(1) One or both cowl sensor contacts and one or both dash sensors must activate.
(2) Electrical energy must be supplied to the airbag inflator by the battery, or by the back-up power circuit if the battery voltage is too low.
(3) The inflator charge must ignite and deploy the airbag.

It takes about 0.1 second from the beginning of the airbag deployment until it is completely deflated (frontal collision against a fixed wall at a speed of 30 mph [50 km/h]).

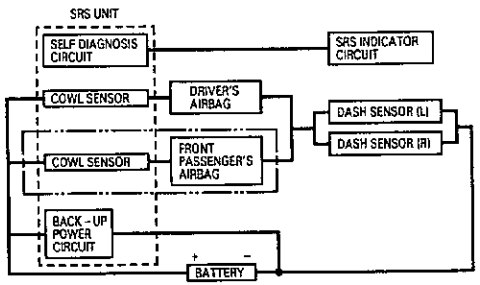


**Self-diagnosis system**
A self-diagnosis circuit is built into the SRS unit; when the ignition switch is turned ON, the SRS indicator light comes on and goes off after about six seconds if the system is operating normally. If the light does not come on, or does not go off after six seconds, or if it comes on while driving, it indicates an abnormality in the system. The system must be inspected and repaired as soon as possible.

# Supplemental Restraint System (SRS)

## Circuit Diagram (Without Front Passenger's Airbag)

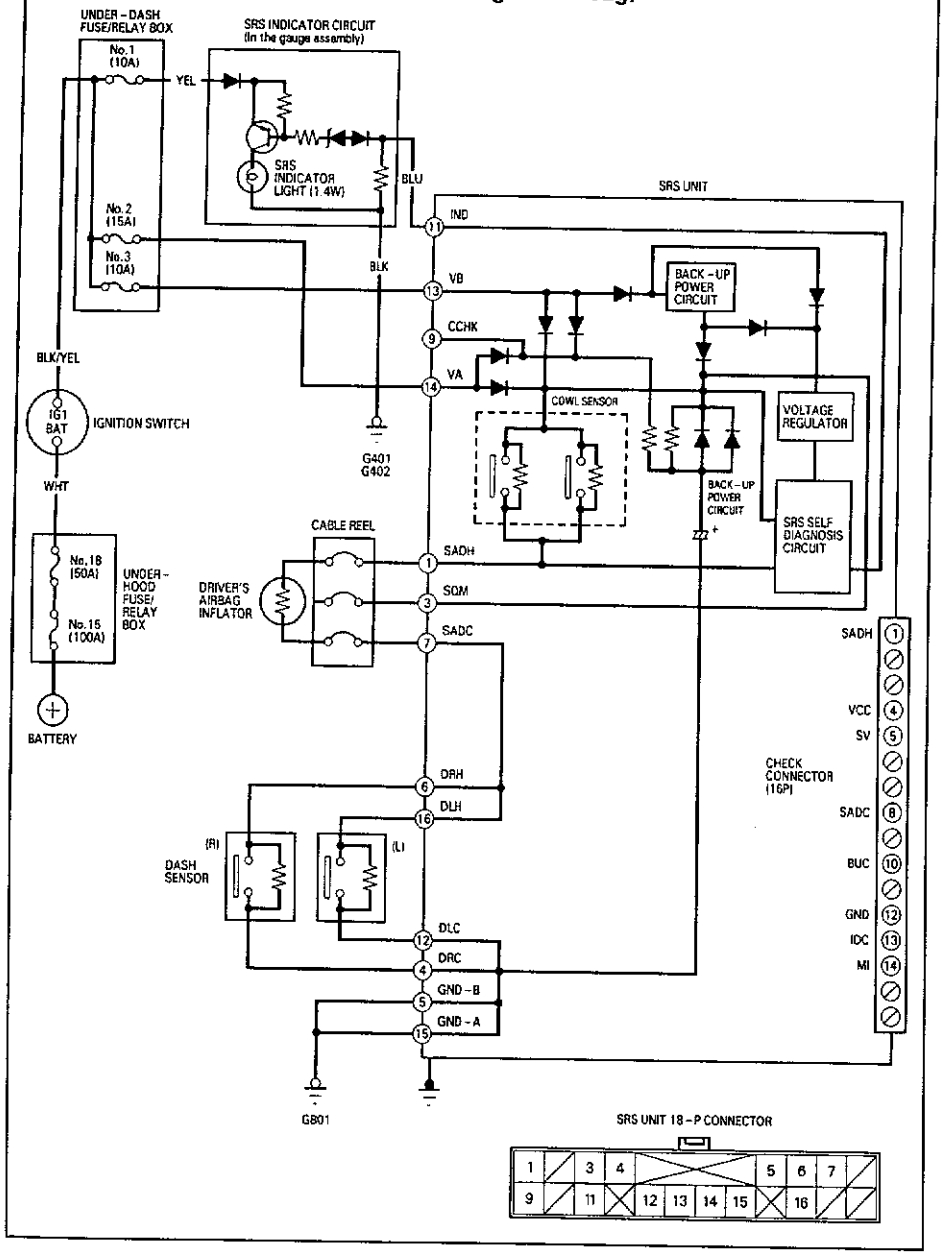






## Circuit Diagram (With Front Passenger's Airbag)

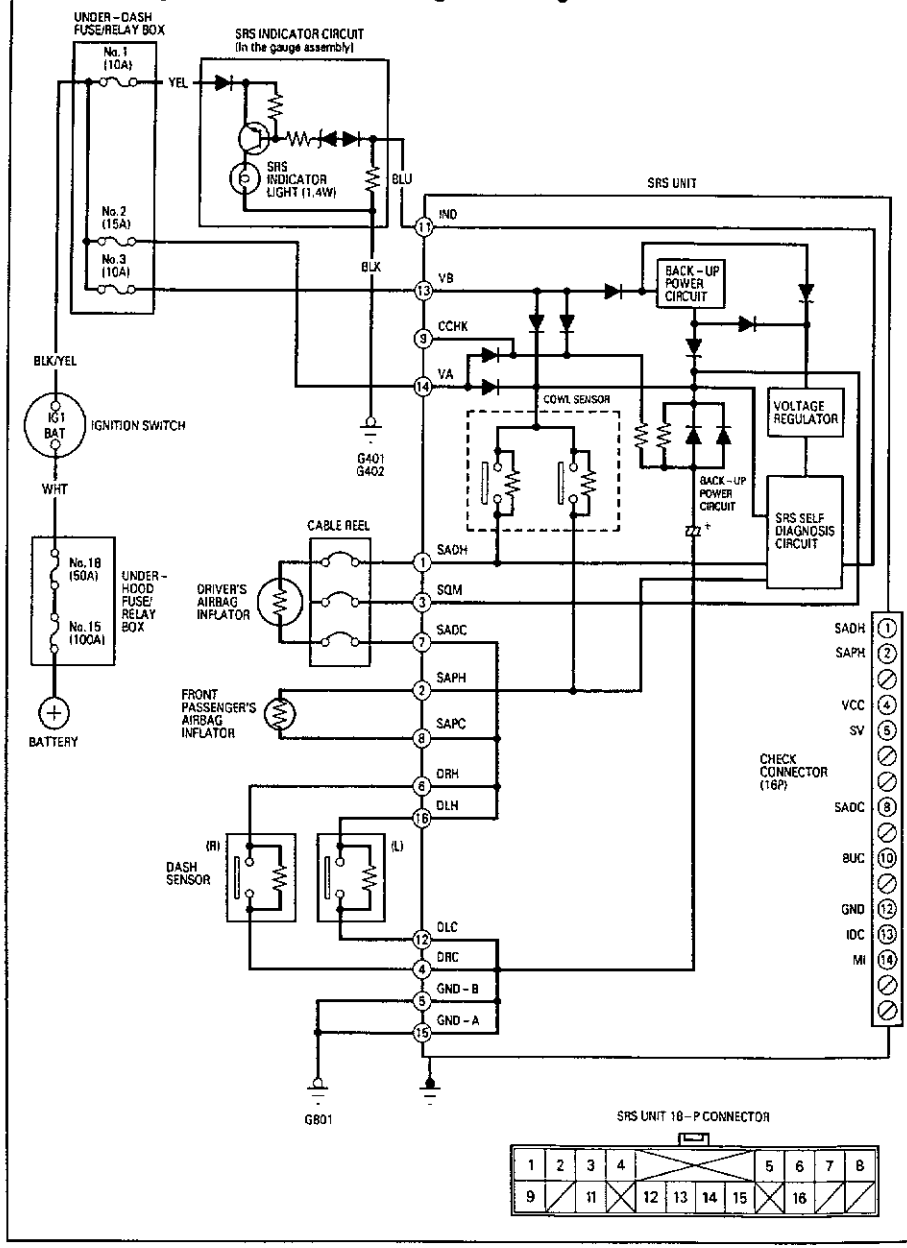

# Supplemental Restraint System (SRS)

## Wiring Locations

**CAUTION: Make sure all SRS ground locations are clean and grounds are securely attached.**

NOTE:
- All SRS electrical wiring harnesses are covered with yellow outer insulation.
- Replace the entire affected SRS harness assembly if it has an open circuit or damaged wiring.

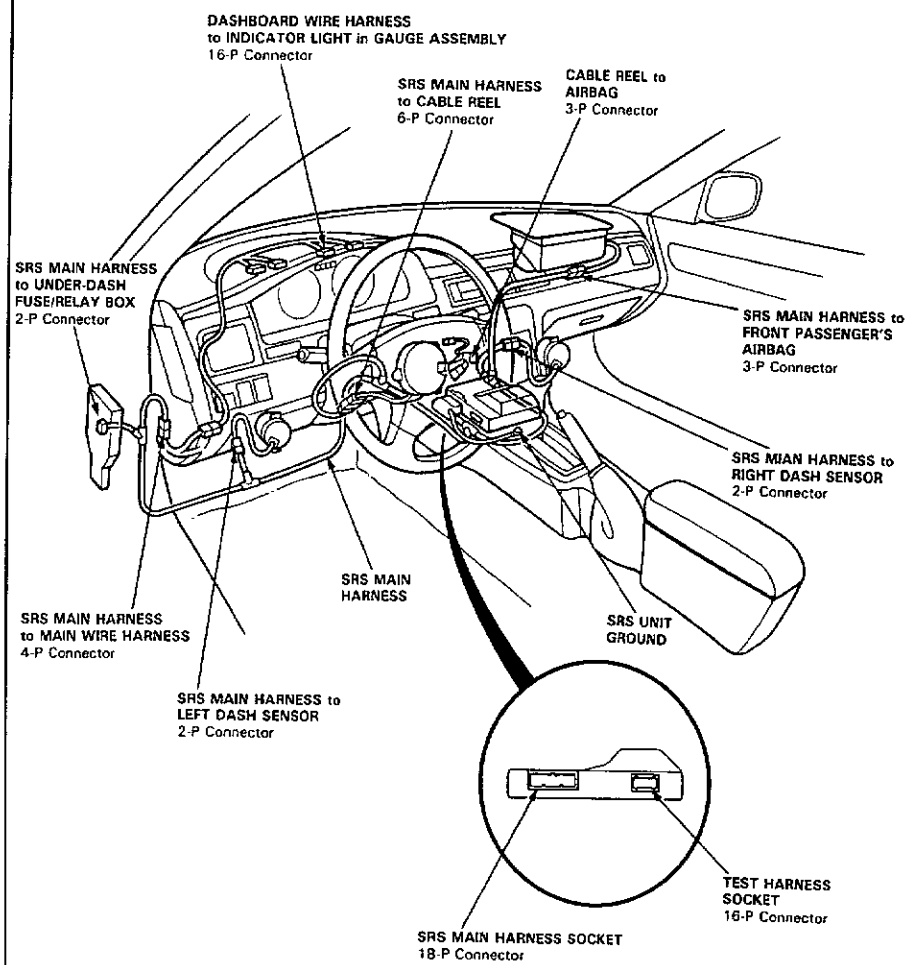






## General Precautions

- Carefully inspect any SRS part before you install it. Do not install any part that shows signs of being dropped or improperly handled, such as dents, cracks or deformation:

  – Airbag assembly (driver's and front passenger's).
  – Dash sensors.
  – Cable reel.
  – SRS unit.

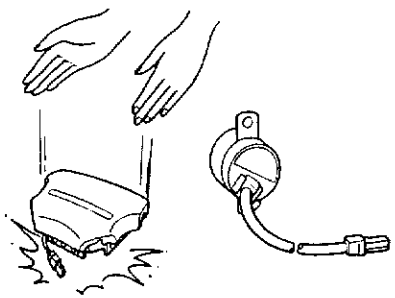

- Use only a digital multimeter (KS-AHM-32-003) to check the system. Using an analog circuit tester may cause an accidental deployment and possible injury.
- Do not install used SRS parts from another car. When making SRS repairs, use only new parts.
- Except when performing electrical inspections, always disconnect both the negative cable and positive cable at the battery before beginning work.
- Replacement of the combination light and wiper/washer switches and cruise control switch can be done without removing the steering wheel:
  – Combination light and wiper/washer switch replacement (see page 23-184).
  – Cruise control switch replacement (see page 23-300).

## Airbag Handling and Storage

Do not try to disassemble the airbag assembly. It has no serviceable parts. Once an airbag has been operated (deployed), it cannot be repaired or reused.

For temporary storage of the airbag assembly during service, please observe the following precautions:

- Store the removed airbag assembly with the pad surface up.

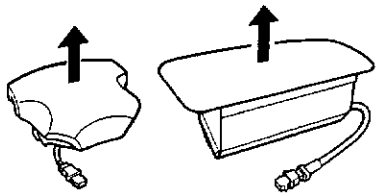

**⚠WARNING If the airbag is improperly stored face down, accidental deployment could propel the unit with enough force to cause serious injury.**

- Store the removed airbag assembly on a secure flat surface away from any high heat source (exceeding 212°F/100°C) and free of any oil, grease, detergent or water.

  **CAUTION: Improper handling or storage can internally damage the airbag assembly, making it inoperative.**
  **If you suspect the airbag assembly has been damaged, install a new unit and refer to the Deployment/Disposal Procedures for disposing of the damaged airbag.**

## Wiring Precautions

- Never attempt to modify, splice or repair SRS wiring.

NOTE: SRS wiring can be identified by special yellow outer protective covering.

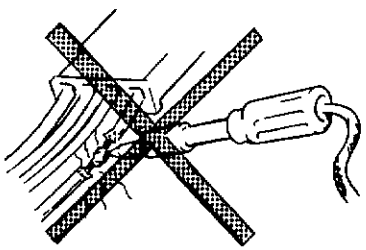

- Be sure to install the harness wires so that they are not pinched or interfering with other car parts.

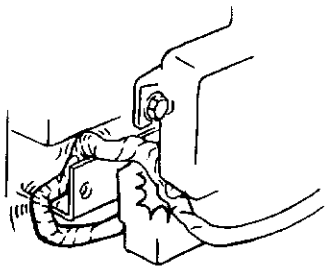

- Make sure all SRS ground locations are clean and grounds are securely fastened for optimum metal-to-metal contact. Poor grounding can cause intermittent problems that are difficult to diagnose.

### Installing the short connector

**⚠WARNING To avoid accidental deployment and possible injury, always install the protective short connector(s) on the driver's and passenger's airbag connector(s) before working near any SRS wiring.**

NOTE: The radio may have a 5-digit coded theft protection circuit. Be sure to get the customer's code number before disconnecting the battery.

1. Disconnect the battery negative cable, then disconnect the positive cable.
2. Install the short connector(s) (RED):

**Driver's Side:**

- Remove the access panel from the steering wheel, then remove the short connector (RED) from the panel.

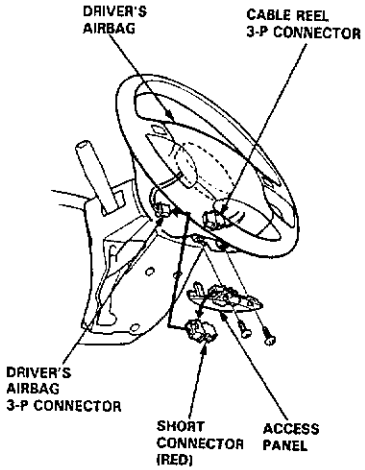


- Disconnect the 3-P connector between the driver's airbag and cable reel, then install the short connector (RED) on the airbag side of the connector.





**Front Passenger's Side:**

- Remove the glove box, then remove the short connector (RED) from the holder.

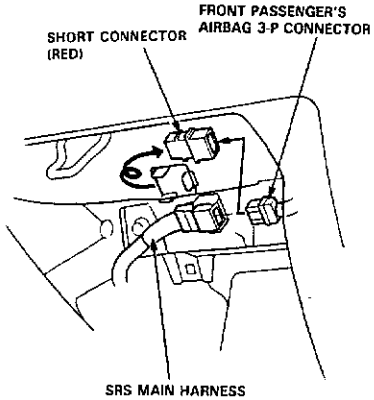


- Disconnect the 3-P connector between the front passenger's airbag and SRS main harness, then install the short connector (RED) on the airbag side of the connector.

### Disconnecting the SRS Connector at the Under-dash Fuse/Relay Box

**CAUTION: Avoid breaking the connector; it's double-locked.**

1. First lift the connector lid with a thin screwdriver, then press the connector tab down and pull the connector out.

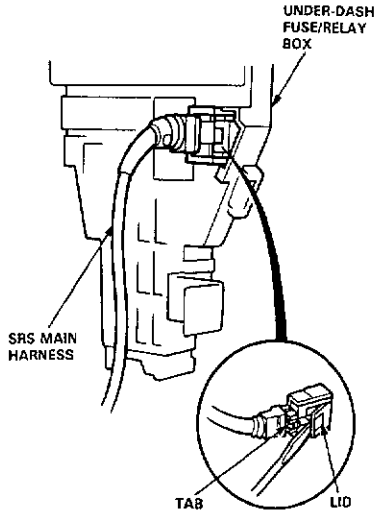


2. To reinstall the connector, push it into position until it clicks, then close its lid.

# Supplemental Restraint System (SRS)

## Steering-related Precautions

### Steering Wheel and Cable Reel Alignment

NOTE: To avoid misalignment of the steering wheel or airbag on reassembly, make sure the wheels are turned straight ahead before removing the steering wheel.

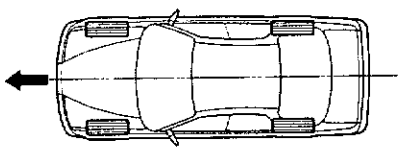

Rotate the cable reel clockwise until it stops.
Then rotate it counterclockwise (approximately two turns) until:

- The yellow gear tooth lines up with the alignment mark on the cover.
- The arrow mark on the cable reel label points straight up.

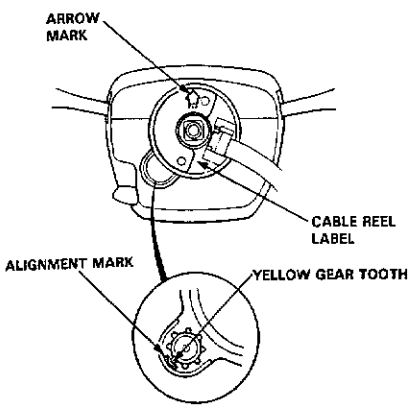


### Steering Column Removal

CAUTION:

- **Before removing the steering column, first disconnect the connector between the cable reel and the SRS main harness.**
- **If the steering column is going to be removed without dismounting the steering wheel, lock the steering by turning the ignition key to O-LOCK position or remove the key from the ignition so that the steering wheel will not turn.**

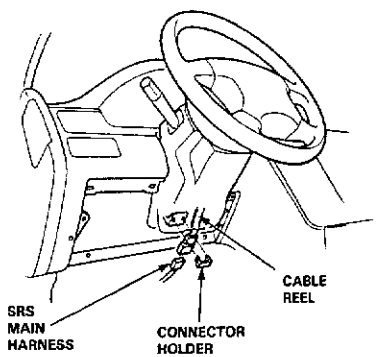


Do not replace the original steering wheel with any other design, since it will make it impossible to properly install the airbag (only use genuine Honda replacement parts).

After reassembly confirm that the wheels are still turned straight ahead and that the steering wheel spoke angle is correct. If minor spoke angle adjustment is necessary, do so only by adjusting the tie-rods, not by removing and repositioning the steering wheel.





## Sensor Inspection

CAUTION: **Take extra care when painting or doing body work in the area below the dashboard. Avoid direct exposure of the sensors or wiring to heat guns, welding, or spraying equipment.**

**⚠ WARNING**

- **Disconnect both the negative and positive battery cables.**
- **Install the short connector(s) before working below the dashboard or near the dash sensors.**
- **After any degree of frontal body damage, inspect both dash sensors. Replace a sensor if it is dented, cracked, or deformed.**

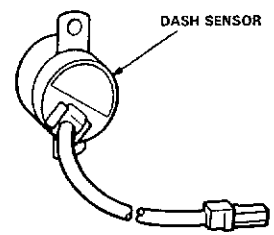


- Be sure the sensors are installed securely.

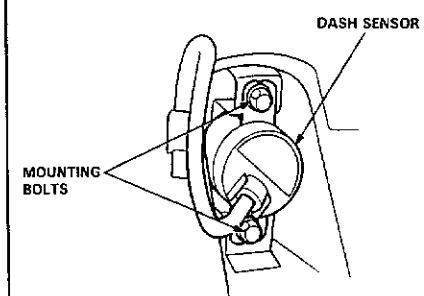


## Inspection After Deployment

After a collision in which the airbags were deployed, inspect the following:

1. Inspect the dash sensors for physical damage. If the sensors are damaged, replace them.
2. Inspect all the SRS wire harnesses. Replace, don't repair, any damaged harnesses.
3. Inspect the cable reel for heat damage. If there is any damage, replace the cable reel.
4. After the car is completely repaired, turn the ignition switch on. If the SRS indicator light comes on for about six seconds and then goes off, the SRS system is OK. If the indicator light does not function properly, go to SRS Troubleshooting.

# Supplemental Restraint System (SRS)

## Troubleshooting

### Self-diagnosis Function

The SRS unit includes a self-diagnosis function. If there is a failure in the sensors, SRS unit, inflator, or their circuits, the SRS indicator light in the gauge assembly goes ON.

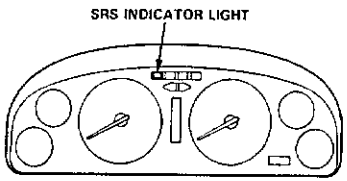


As a system check, the SRS indicator light also comes on when the ignition is first turned to the II position. If the light goes off after approximately six seconds, the system is OK.
If the SRS indicator light remains on (or fails to come on in the system check mode), one of the SRS components (or the wiring/connectors in between) is faulty.

### Troubleshooting Precautions

- Always use the test harness. Do not use test probes directly on component connector terminals or wires; you may damage them or the SRS unit.
- When connecting any of the test harnesses to the system, push the connectors straight-in; do not bend the connector terminals.
- Before disconnecting any part of the SRS wire harness, install the short connector (RED) on the driver's airbag. On cars equipped with a front passenger's airbag, install short connectors on the driver's airbag and the front passenger's airbag.

### SRS Indicator Light Troubleshooting

**Possible conditions:**

1. SRS indicator light does not come on at all—see page 23-336.
2. SRS indicator light stays on constantly—see page 23-340.
3. SRS indicator light comes on in combination with a failure of another electrical system (brake system light, malfunction indicator lamp etc.). Check for damage/corrosion at the under-dash fuse/relay box connector.

NOTE:
- Before starting the applicable troubleshooting, check the condition of all SRS connectors and ground points.
- If the fault is not found after completing the applicable troubleshooting, substitute a known-good SRS unit and check whether the indicator light goes off.

### Short Connector Installation

**WARNING** **To avoid accidental deployment and possible injury, always install the protective short connector on the driver's airbag connector and, on cars equipped with front passenger's airbag, install protective short connectors on the driver's and front passenger's airbag before working near any SRS wiring.**

NOTE: The radio may have a 5-digit coded theft protection circuit. Be sure to get the customer's code number before disconnecting the battery.

1. Disconnect the battery negative cable, then disconnect the positive cable.
2. Install the short connector(s):

**Driver's Side:**
- Remove the access panel from the steering wheel, then remove the short connector (RED) from the panel.

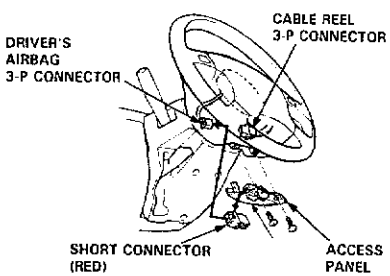


- Disconnect the connector between the driver's airbag and cable reel, then install the short connector (RED) on the airbag side of the connector.

**Front Passenger's Side (GS model):**
- Remove the glove box.
- Disconnect the connector between the front passenger's airbag and SRS main harness, then install the short connector (RED) on the airbag side of the connector.

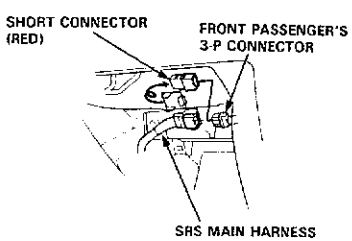






## Test Harnesses and Attachment Points

**Test Harness A**

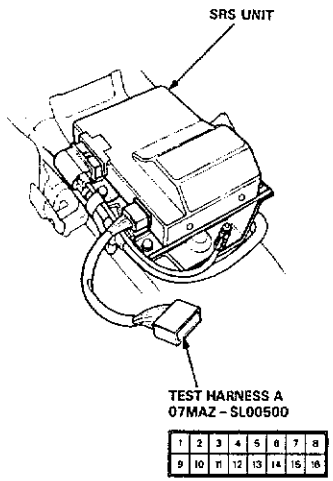


**Test Harness B**

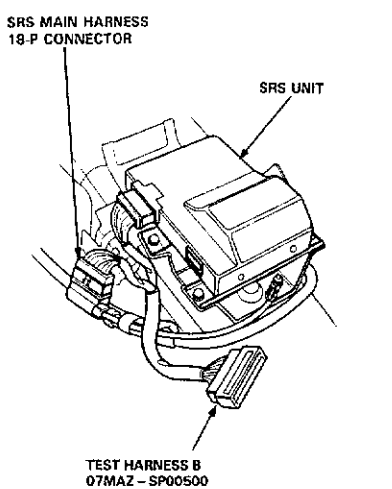


ROW A (SRS UNIT END)

| | | | | | | | | | | | | | | | | | |
|---|---|---|---|---|---|---|---|---|---|---|---|---|---|---|---|---|---|
| A | 1 | 2 | 3 | 4 | 5 | 6 | 7 | 8 | 9 | 10 | 11 | 12 | 13 | 14 | 15 | 16 | 17 | 18 |
| B | 1 | 2 | 3 | 4 | 5 | 6 | 7 | 8 | 9 | 10 | 11 | 12 | 13 | 14 | 15 | 16 | 17 | 18 |

ROW B (WIRE HARNESS END)

**Test Harness C**

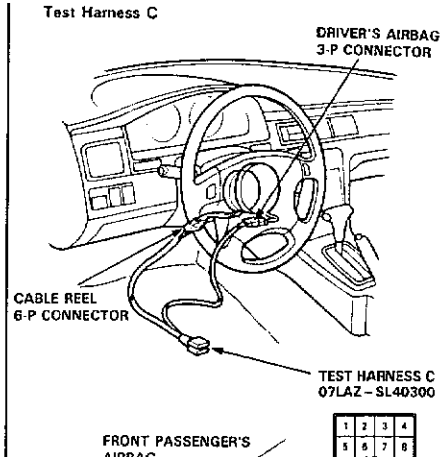


**Test Harness D**

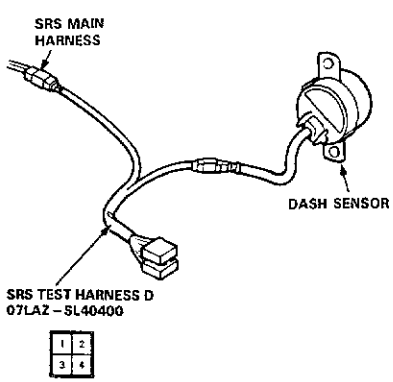

## Troubleshooting

### The SRS Indicator Does Not Light

**CAUTION:**
- **Use only a digital multimeter (KS-AHM-32-003) to check the system.**

NOTE: The radio may have a 5-digit coded theft protection circuit. Be sure to get the customer's code number before disconnecting the battery.

**Disconnect the battery negative cable and then the positive cable. Install the short connector(s) on the airbag(s) (see page 23-330).**

Reconnect the battery positive cable and then the negative cable.

Turn the ignition switch ON.

Do any other indicator lights (ABS etc.) come on (in the gauge assembly)?
- NO → Inspect the No. 1 (10 A) fuse (Under-dash fuse/relay box).
  - Is No. 1 fuse OK?
    - NO → **Replace the fuse.**
    - YES → **Repair open in dashboard wire harness between the No. 1 fuse and gauge assembly.**
- YES → Turn the ignition switch OFF.

Disconnect the SRS main harness 18-P connector from the SRS unit.

Turn the ignition switch ON.

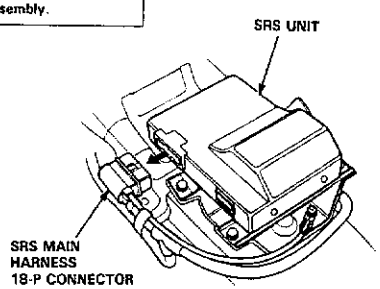


Does the SRS indicator light come on?
- YES → **The SRS unit is faulty.**
- NO → Turn the ignition switch OFF

(To page 23-337)





(From page 23-336)

Disconnect the SRS main harness 4-P connector from the main wire harness.

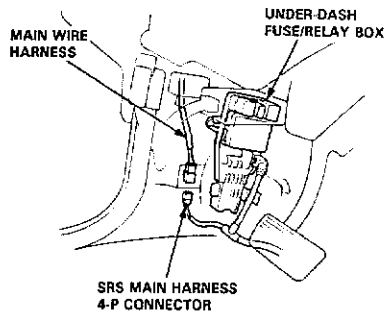


Turn the ignition switch ON.

Is SRS indicator light ON?
- YES → **The SRS main harness is faulty.**
- NO → Turn the ignition switch OFF.

Remove the gauge assembly, then inspect the SRS indicator light bulb.

Is the SRS indicator light bulb OK?
- NO → **Replace the indicator light bulb.**
- YES → Connect a voltmeter between the No. 12 terminal of the 16-P connector and body ground.

Turn the ignition switch ON.

Measure the voltage between the No. 12 terminal and body ground.

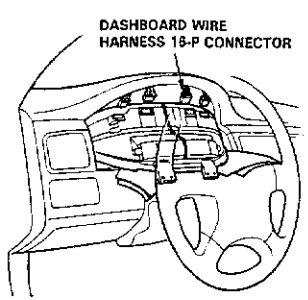


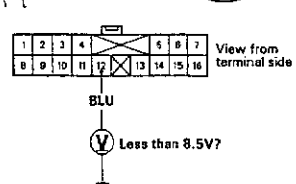


(To page 23-338)

(cont'd)

# Supplemental Restraint System (SRS)

## Troubleshooting (cont'd)

(From page 23-337)

Is there less than 8.5 V with the ignition switch ON?

NO → Short in BLU wire of the dashboard wire harness. Replace the dashboard wire harness.

YES

Turn the ignition switch OFF.

Connect the voltmeter between the No. 3 terminal (+) and the No. 7 terminal (−) of the dashboard wire harness 16-P connector.

Turn the ignition switch ON.

Measure the voltage between the No. 3 terminal and the No. 7 terminal.

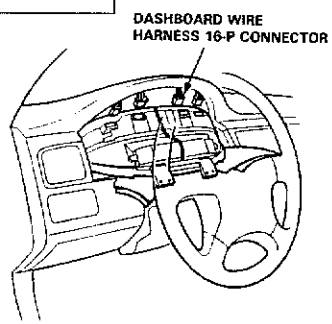


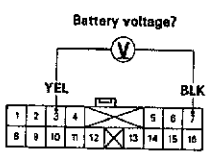


View from terminal side.

Is there battery voltage?

NO → Check for continuity between the No. 7 terminal and body ground.

Is there continuity?

NO → Repair open in the BLK wire (No. 7 terminal) between the gauge assembly and body ground or look for a poor ground (G401, 402).

YES → Repair open in the YES wire (No. 3 terminal) of the dashboard wire harness between the gauge assembly and the No. 1 (10 A) fuse in the under-dash fuse/relay box.

YES

Turn the ignition switch OFF.

(To page 23-339)



(From page 23-338)

Reconnect each connector to the gauge assembly and SRS unit then connect Test Harness A to the SRS unit.

Measure the voltage between the No. 13 terminal and body ground for six seconds after ignition is first turned on.

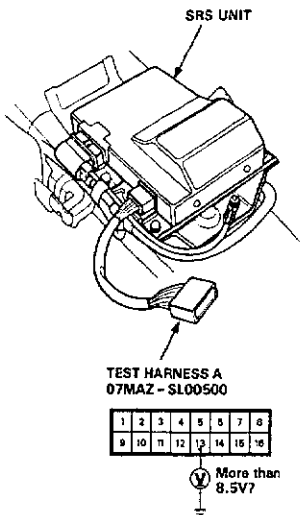


Is there more than 8.5 V?

NO → SRS indicator circuit (in the gauge assembly) is faulty.

YES

SRS unit is faulty.

(cont'd)

**SRS Indicator Light Stays on Continuously**

1. Make a photocopy of this page (without front passenger's airbag), or the next page (with front passenger's airbag).

2. Connect Test Harness A (07MAZ–SL00500) to the SRS unit as shown.

3. Turn the ignition switch ON.
   - Voltages in the chart assume the car's "battery voltage" is about 12 volts. Less than 12 volts will result in different or possibly false readings.
   - Do not disconnect the airbag from the circuit when checking SRS unit voltages.

4. First, check for voltage between Test Connector Terminal No. 12 and ground.
   - If voltage is indicated, there is a poor ground (see page 23-353).
   - Continue with checking all the other terminals if no voltage is indicated.

5. Record your voltage readings, for each terminal, in the row of blank boxes near the top of the chart.

6. Compare each reading with the voltage ranges listed in the column below it. If the reading is within a range, circle that range.

   - If you circled all the Failure Mode ranges across any row, check the car for the Probable Failure Mode listed at the end of the row. (Refer to the letter for that Mode on the following pages).

   - If you did not circle all the ranges across any row, replace the SRS unit with a known-good unit, and retest.
     - If all your voltage readings are now Normal, replace the SRS unit.
     - If your voltage readings are still not normal but they don't fit within a complete row of Failure Mode ranges, check the condition of the terminals in each of the SRS connectors shown in the system diagram on page 23-328.

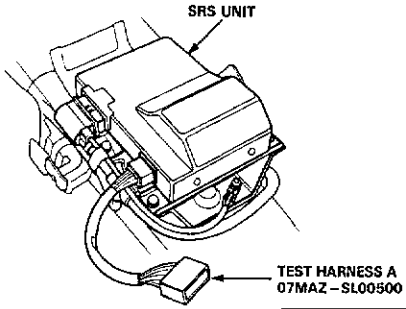


**Without Front Passenger's Airbag:**

NOTE: Do not disconnect the airbag when checking SRS unit voltages.

| 1 | 2 | 3 | 4 | 5 | 6 | 7 | 8 |
|---|---|---|---|---|---|---|---|
| 9 | 10 | 11 | 12 | 13 | 14 | 15 | 16 |

| Test Harness Terminal | 1 SADH | – | – | 4 VCC | 5 SV | – | – | 8 SADC | – | 10 BUC1 | – | 12 GND | 13 IDC | 14 M1 | – | – | Probable Failure Mode |
|---|---|---|---|---|---|---|---|---|---|---|---|---|---|---|---|---|---|
| Normal Voltage | 5.2 -7.3 | – | – | 4.5 -5.5 | 12.0 -14.3 | – | – | 5.6 -7.3 | – | 11.5 -14.5 | – | 0 | 8.5 -13.6 | 11.2 -14.6 | – | – | |
| Your Voltage Reading | | – | – | | | – | – | – | – | | – | | | | – | – | |
| Failure Mode Voltage | 3.7 -4.8 | – | – | 4.5 -5.5 | 12.0 -14.3 | – | – | 3.7 -4.9 | – | 11.5 -14.5 | – | 0 | 2.0 -8.5 | 11.2 -14.6 | – | – | A Open in one cowl sensor contact. |
| | 0 | – | – | 4.5 -5.5 | 12.0 -14.3 | – | – | 0 | – | 11.5 -14.5 | – | 0 | 2.0 -8.5 | 11.2 -14.6 | – | – | B • Open in both cowl sensor contact. • Short in one dash sensor. • Short to driver's airbag inflator (body ground). |
| | 11.2-14.6 | – | – | 4.5 -5.5 | 12.0 -14.3 | – | – | 11.2 14.6 | – | 11.5 -14.5 | – | 0 | 2.0 -8.5 | 11.2 -14.6 | – | – | C Short in cowl sensor or open in both dash sensors. |
| | 7.4 -9.6 | – | – | 4.5 -5.5 | 12.0 -14.3 | – | – | 7.4 -9.7 | – | 11.5 -14.5 | – | 0 | 2.0 -8.5 | 11.2 -14.6 | – | – | D Open in one dash sensor |
| | 11.2 -14.6 | – | – | 4.5 -5.5 | 12.0 -14.3 | – | – | 3.7 -4.9 | – | 11.5 -14.5 | – | 0 | 2.0 -8.5 | 11.2 -14.6 | – | – | E Open in driver's airbag inflator or cable reel. |
| | 5.6 -7.3 | – | – | 0 | 0 | – | – | 5.6 -7.3 | – | 11.5-14.5 | – | 0 | 2.0 -8.5 | 11.2 14.6 | – | – | H Blown SRS fuse (No. 3) or open in the wire. |
| | 5.6 -7.3 | – | – | 4.5 -5.5 | 12.0 -14.3 | – | – | 5.6 -7.3 | – | 11.5 -14.5 | – | 0 | 0 (8.5 -13.6) | 11.2-14.6 | – | – | I Short (or open) in SRS indicator wire harness. |





**With Front Passenger's Airbag:**

NOTE: Do not disconnect the airbags when checking SRS unit voltages.

| Test Harness Terminal | 1 SADH | 2 SAPH | – | 4 VCC | 5 SV | – | – | 8 SADC | – | 10 BUC1 | – | 12 GND | 13 IDC | 14 M1 | – | – | Probable Failure Mode |
|---|---|---|---|---|---|---|---|---|---|---|---|---|---|---|---|---|---|
| Normal Voltage | 5.5 -7.2 | 5.5 -7.2 | – | 4.5 -5.5 | 12.0 -14.3 | – | – | 5.6 -7.3 | – | 11.5 -14.5 | – | 0 | 8.5 -13.6 | 11.2 -14.6 | – | – | |
| Your Voltage Reading | | – | – | | | – | – | – | – | | – | | | | – | – | |
| Failure Mode Voltage | 3.7 -4.8 | 3.7 -4.8 | – | 4.5 -5.5 | 12.0 -14.3 | – | – | 3.7 -4.9 | – | 11.5 -14.5 | – | 0 | 2.0 -8.5 | 11.2 -14.6 | – | – | A Open in one cowl sensor contact |
| | 0 | 0 | – | 4.5 -5.5 | 12.0 -14.3 | – | – | 0 | – | 11.5 -14.5 | – | 0 | 2.0 -8.5 | 11.2 -14.6 | – | – | B • Open in both cowl sensor contacts. • Short in one dash sensor • Short to driver's or passenger's airbag inflator (body ground) |
| | 11.2 -14.6 | 11.2 -14.6 | – | 4.5 -5.5 | 12.0 -14.3 | – | – | 11.2 -14.6 | – | 11.5 -14.5 | – | 0 | 2.0 -8.5 | 11.2 -14.6 | – | – | C Short in cowl sensor or open in both dash sensors |
| | 7.4 -9.6 | 7.4 -9.6 | – | 4.5 -5.5 | 12.0 -14.3 | – | – | 7.4 -9.7 | – | 11.5 -14.5 | – | 0 | 2.0 -8.5 | 11.2 -14.6 | – | – | D Open in one dash sensor |
| | 11.2 -14.6 | 3.7 -4.8 | – | 4.5 -5.5 | 12.0 -14.3 | – | – | 3.7 -4.9 | – | 11.5 -14.5 | – | 0 | 2.0 -8.5 | 11.2 -14.6 | – | – | E Open in driver's airbag inflator or cable reel. |
| | 3.7 -4.8 | 11.2 -14.6 | – | 4.5 -5.5 | 12.0 -14.3 | – | – | 3.7 -4.9 | – | 11.5 -14.5 | – | 0 | 2.0 -8.5 | 11.2 -14.6 | – | – | F Open in front passenger's airbag inflator. |
| | 11.2 -14.6 | 11.2 -14.6 | – | 4.5 -5.5 | 12.0 -14.3 | – | – | 0 | – | 11.5 -14.5 | – | 0 | 2.0 -8.5 | 11.2 -14.6 | – | – | G Open in driver's and passenger's airbag inflator |
| | 5.5 -7.2 | 5.5 -7.2 | – | 0 | 0 | – | – | 5.6 -7.3 | – | 11.2 -14.5 | – | 0 | 2.0 -8.5 | 11.2 -14.6 | – | – | H Blown SRS fuse (No. 3) or open in the wire |
| | 5.5 -7.2 | 5.5 -7.2 | – | 4.5 -5.5 | 12.0 -14.3 | – | – | 5.6 -7.3 | – | 11.5 -14.5 | – | 0 | 0 (8.5 -13.6) | 11.2 -14.6 | – | – | I Short (or open) in SRS indicator wire harness |

(cont'd)

**Mode A: Open in one cowl sensor contact.**

- The SRS unit is faulty. Substitute a known-good SRS unit and recheck the voltages according to the chart on page 23-340.

**Mode B:**

- **Short to driver's or passenger's airbag inflator (body ground).**
- **Short in dash sensor.**
- **Open in both cowl sensor contacts.**

NOTE: The radio may have a 5-digit coded theft protection circuit. Be sure to get the customer's code number before disconnecting the battery cables.

1. Before disconnecting any part of the SRS wire harness, install the short connector(s) (RED) on the airbag(s) (see page 23-330).
2. Connect Test Harness B (07MAZ–SP00500) between the SRS unit and SRS main harness 18-P connector.

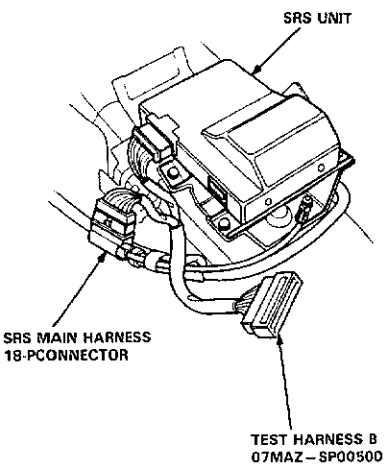


3. Reconnect the driver's airbag connector, then check continuity between the B1 terminal and body ground, and between the B7 terminal and body ground.

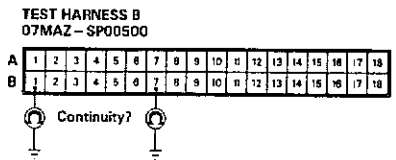


- If there is continuity at either terminal, go to step 6.
- If there is no continuity at either terminal;
  – Without front passenger's airbag, go to step 5.
  – With front passenger's airbag, go to step 4.

4. Reconnect the front passenger's airbag connector, then check continuity between the B2 terminal and body ground, and between the B8 terminal and body ground.

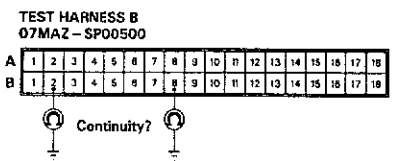


- If there is continuity at either terminal, go to step 10.
- If there is no continuity at either terminal, go to step 5.





5. Check continuity between body ground and each terminal of both dash sensors.

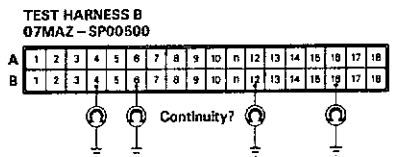


- If there is continuity at any of the terminals, go to step 12.
- If there is no continuity at any terminal, go to step 13.

6. Disconnect the cable reel 6-P connector from the SRS main harness, then connect Test Harness C (07LAZ–SL40300) only to the cable reel side of the 6-P connector.

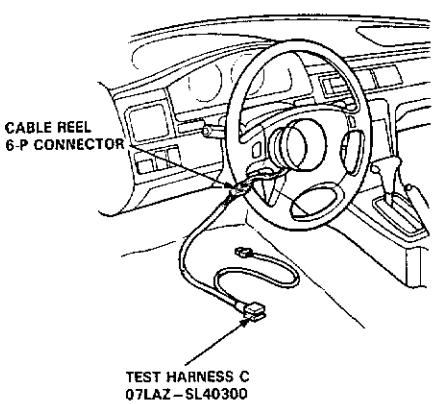


7. Check continuity between the No.4 terminal and body ground, and between the No.5 terminal and body ground.

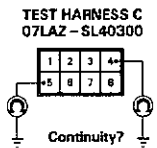


- If there is continuity at either terminal, go to step 8.
- If there is no continuity at either terminal, the SRS main harness is faulty. Replace it and recheck the voltages according to the chart on page 23-340.

(cont'd)

## Troubleshooting (cont'd)

8. Disconnect the driver's airbag 3-P connector from the cable reel, then connect Test Harness C (07LAZ–SL40300) to the driver's airbag 3-P connector.

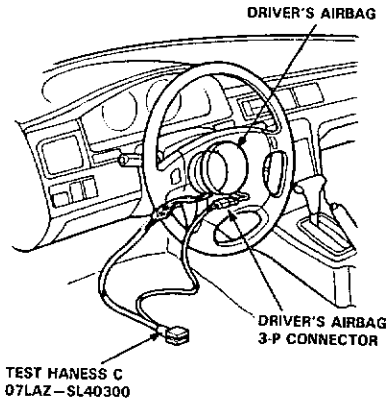


9. Check continuity between the No.7 terminal and body ground, and between the No.8 terminal and body ground.

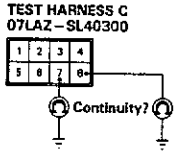


- If there is continuity at either terminal, the driver's airbag inflator is faulty. Replace it and recheck the voltages according to the chart on page 23-340.
- If there is no continuity at either terminal, the cable reel is faulty. Replace it and recheck the voltages according to the chart on page 23-340.

10. Disconnect the front passenger's airbag 3-P connector from the SRS main harness, then connect Test Harness C (07LAZ–SL40300) to the airbag side of the connector.

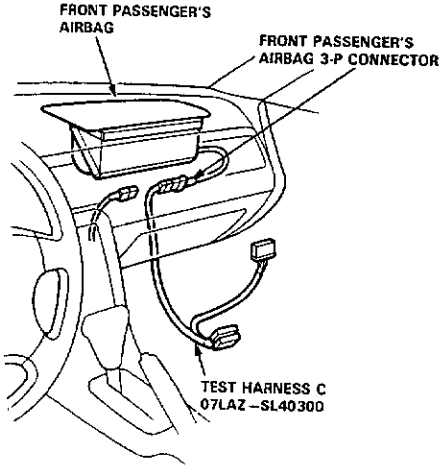


11. Check continuity between the No.7 terminal and body ground, and between the No.8 terminal and body ground.

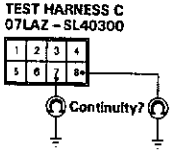


- If there is continuity at either terminal, the front passenger's airbag inflator is faulty. Replace it and recheck the voltages according to the chart on page 23-340.
- If there is no continuity at either terminal, the SRS main harness is faulty. Replace it and recheck the voltages according to the chart on page 23-340.





12. Connect Test Harness D (07LAZ–SL40400) between the dash sensor and SRS main harness 2-P connector. Check continuity between the No.1 terminal and body ground, and between the No.2 terminal and body ground.

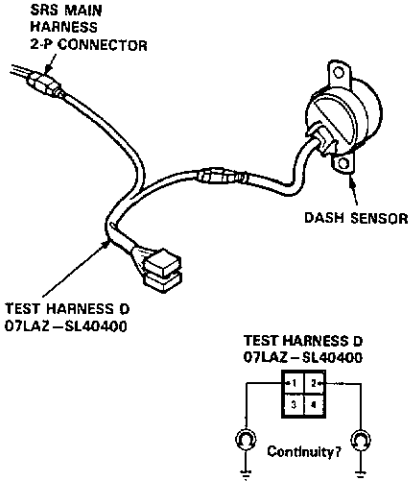


- If there is continuity at either terminal, the dash sensor is faulty. Replace it and recheck the chart on page 23-340.
- If there is no continuity at either terminal, the SRS main harness is faulty. Replace it and recheck the voltages according to the chart on page 23-340.

13. Check the resistance between the left dash sensor terminals B12 and B16, and between the right dash sensor terminals B4 and B6.

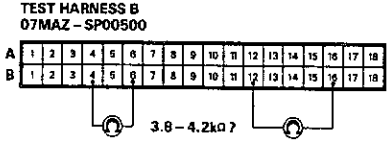


- If resistance is 3.8–4.2 kΩ for both sensors, the SRS unit is faulty. Substitute a know-good SRS unit and recheck the voltages according to the chart on page 23-340.
- If resistance is less than 3.8 kΩ for either sensor, go to step 14.

14. Connect Test Harness D (07LAZ–SL40400) between the dash sensor and SRS main harness 2-P connector. Check the resistance between the No.1 terminal and No.2 terminal.

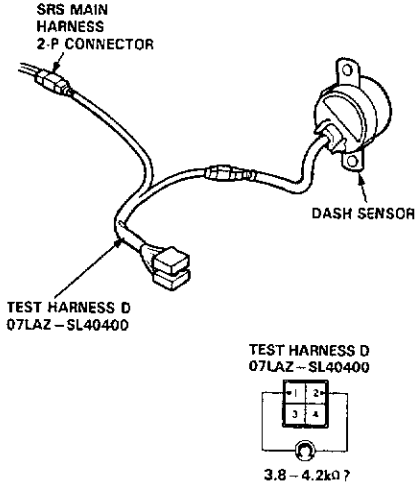


- If resistance is 3.8–4.2 kΩ, the SRS main harness is faulty. Replace it and recheck the voltages according to the chart on page 23-340.
- If resistance is less than 3.8 kΩ, the dash sensor is faulty. Replace it and recheck the voltages according to the chart on page 23-340.

(cont'd)

## Troubleshooting (cont'd)

**Mode C: Short in cowl sensor, or open in both dash sensors.**
**Mode D: Open in one dash sensor.**

NOTE: The radio may have a 5-digit coded theft protection circuit. Be sure to get the customer's code number before disconnecting the battery cables.

1. Disconnect the battery negative cable and then the positive cable. Install the short connector(s) on the airbag(s) (see page 23-330).
2. Connect Test Harness B (07MAZ–SP00500) between the SRS unit and SRS main harness 18-P connector.

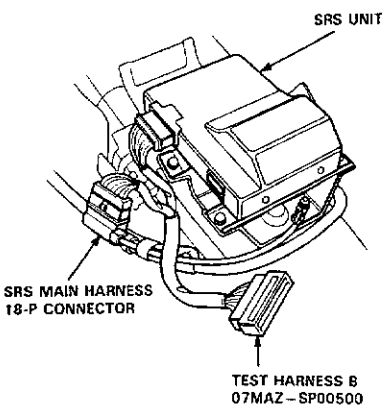


3. Check the resistance between the left dash sensor terminals B12 and B16, and between the right dash sensor terminals B4 and B6.

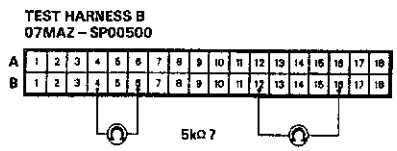


- If resistance is more than 5 kΩ for either sets of terminals, go to step 4.
- If resistance is less than 5 kΩ for both sets of terminal, the SRS unit is faulty. Substitute a known-good SRS unit and recheck the voltages according to the chart on page 23-340.





3. Connect Test Harness D (07LAZ–SL40400) between the dash sensor and SRS main harness 2-P connector.
   Check the resistance between the No. 1 terminal and No. 2 terminal.

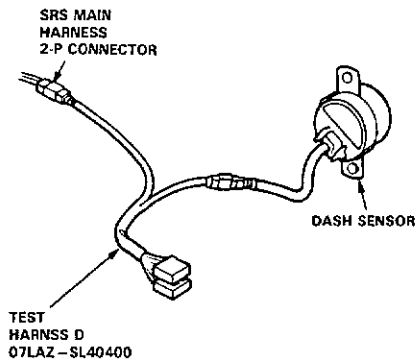

- If resistance is more than 5 kΩ, the dash sensor is faulty. Replace it and recheck the voltages according to the chart on page 23-340.
- If resistance is less than 5 kΩ, the SRS main harness is faulty. Replace the SRS main harness and recheck the voltages according to the chart on page 23-340.

**Mode E: Open in driver's airbag inflator or cable reel.**

NOTE: The radio may have a 5-digit coded theft protection circuit. Be sure to get the customer's code number before disconnecting the battery cables.

1. Before disconnecting any part of the SRS wire harness, install the short connector(s) (RED) on the airbag(s) (see page 23-330).
2. Connect Test Harness B (07MAZ–SP00500) between the SRS unit and SRS main harness 18-P connector.

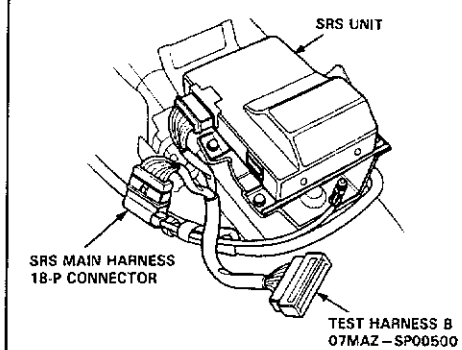


3. Reconnect the driver's airbag connector, check the resistance between the B1 and the B7 terminals.

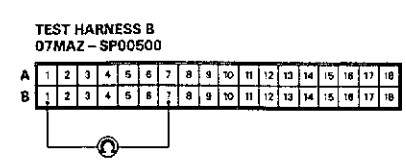


- If resistance is more than 0.2 kΩ, go to step 4.
- If resistance is less than 0.2 kΩ, the SRS unit is faulty. Substitute a known-good SRS unit and recheck the voltages according to the chart on page 23-340.

(cont'd)

4. Disconnect the cable reel 6-P connector from the SRS main harness, then connect Test Harness C (07LAZ–SL40300) only to the cable reel side of the connector.

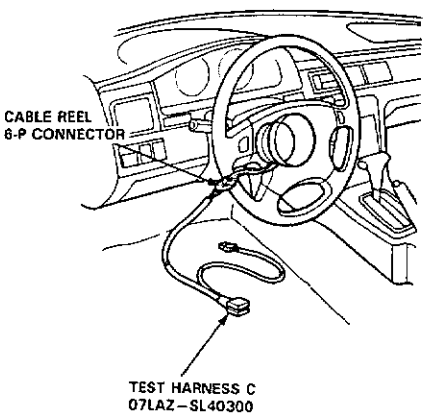


5. Measure the resistance between the No. 4 terminal and the No. 5 terminal.

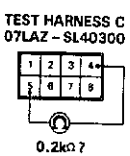


- If resistance is more than 0.2 kΩ, go to step 6.
- If resistance is less than 0.2 kΩ, the SRS main harness is faulty. Replace it and recheck the voltages according to the chart on page 23-340.

6. Disconnect the driver's airbag 3-P connector from the cable reel harness, then connect Test Harness C (07LAZ–SL40300) to the driver's airbag 3-P connector.

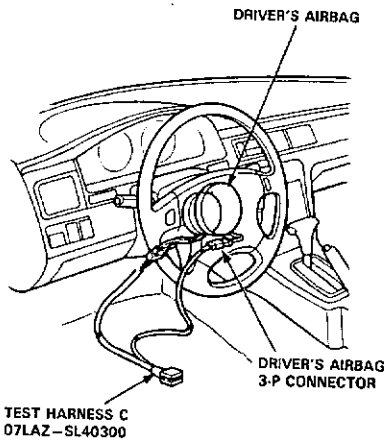


7. Measure the resistance between the No. 7 terminal and the No. 8 terminal.

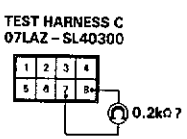


- If resistance is more than 0.2 kΩ, the driver's airbag inflator is faulty. Replace the airbag assembly and recheck the voltages according to the chart on page 23-340.
- If resistance is less than 0.2 kΩ, the cable reel is faulty. Replace it and recheck the voltages according to the chart on page 23-340.





**Mode F: Open in front passenger's airbag inflator.**

NOTE: The radio may have a 5-digit coded theft protection circuit. Be sure to get the customer's code number before disconnecting the battery cables.

1. Before disconnecting any part of the SRS wire harness, install the short connector(s) (RED) on the airbag(s) (see page 23-330).
2. Connect Test Harness B (07MAZ–SP00500) between the SRS unit and SRS main harness 18-P connector.

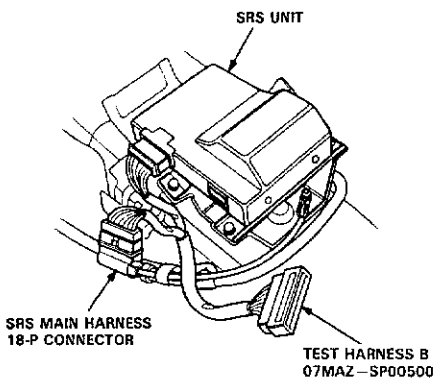


3. Reconnect the front passenger's airbag connector, then measure the resistance between the B2 terminal and B8 terminal.

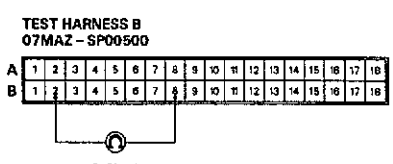


- If resistance is more than 0.2 kΩ, go to step 4.
- If resistance is less than 0.2 kΩ, the SRS unit is faulty. Substitute a known-good SRS unit and recheck the voltages according to the chart on page 23-340.

4. Disconnect the front passenger's airbag 3-P connector from the SRS main harness, then connect Test Harness C (07LAZ–SL40300) to the front passenger's airbag side of the connector.

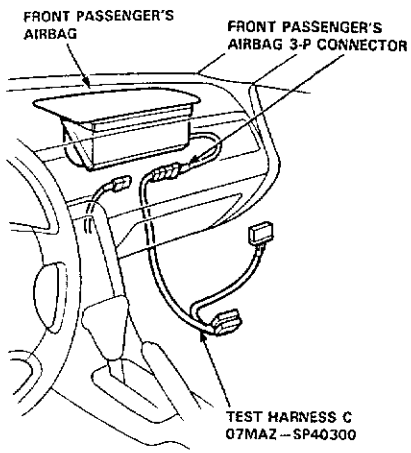


5. Measure the resistance between the No. 7 terminal and the No. 8 terminal.

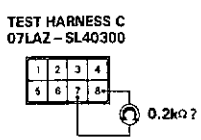


- If resistance is more than 0.2 kΩ, the front passenger's airbag inflator is faulty. Replace the front passenger's airbag assembly and recheck the voltages according to the chart on page 23-340.
- If resistance is less than 0.2 kΩ, the cable reel is faulty. Replace the cable reel and recheck the voltages according to the chart on page 23-340.

(cont'd)

**Mode H: Blown SRS No. 3 fuse, or open in the wire.**

NOTE: The radio may have a 5-digit coded theft protection circuit. Be sure to get the customer's code number before disconnecting the battery cables.

1. Check the SRS No. 3 (10 A) fuse in the under-dash fuse/relay box. If it's OK, go on to step 2.
   If it's blown, replace it with a new 10 A fuse, then turn the ignition switch ON:
   - If fuse doesn't blow, go on to step 2.
   - If the fuse blows, troubleshoot as necessary to find the short.
2. Before disconnecting any part of the SRS wire harness, install the short connector(s) (RED) on the airbag(s) (see page 23-330).
3. Connect Test Harness B (07MAZ-SP00500) between the SRS unit and SRS main harness 18-P connector.

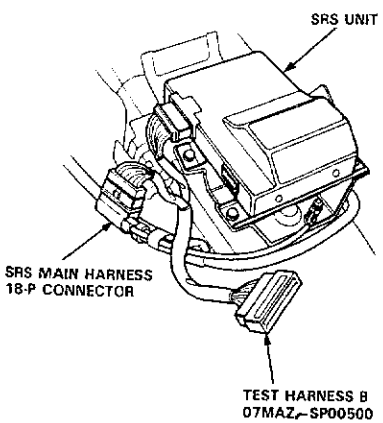


4. Reconnect the positive and negative cables to the battery.
5. Measure the voltage between the B13 terminal and body ground with the ignition switch ON.

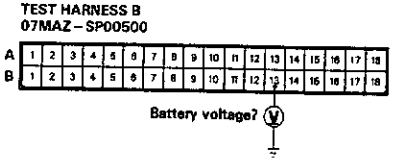


- If there is battery voltage, the SRS unit is faulty. Replace it and recheck the voltages according to the chart on page 23-340.
- If less than battery voltage, the SRS main harness is faulty. Replace it and recheck the voltages according to the chart on page 23-340.





**Mode I: Short or open in SRS indicator wire harness.**

NOTE: The radio may have a 5-digit coded theft protection circuit. Be sure to get the customer's code number before disconnecting the battery cables.

1. Disconnect the SRS main harness 4-P connector from the main wire harness.

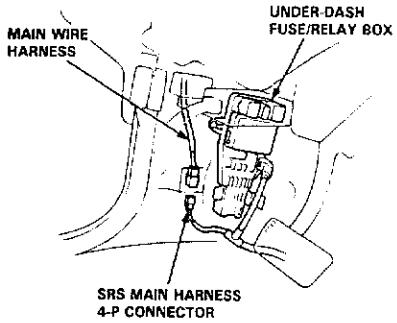


2. Turn the ignition switch ON and wait for six seconds. Measure the voltage between the No. 1 terminal and body ground on the SRS main harness 4-P connector side.

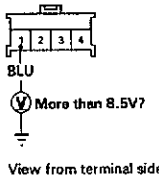


- If voltage is more than 8.5 V, go to step 8.
- If voltage is less than 8.5 V, go to step 3.

3. Before disconnecting any part of the SRS wire harness, install the short connector(s) (RED) on the airbag(s) (see page 23-330).
4. Connect Test Harness B (07MAZ-SP00500) between the SRS unit and SRS main harness 18-P connector

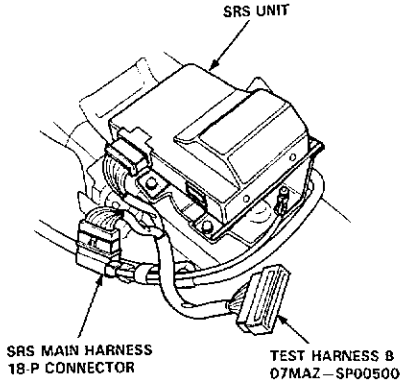


5. Reconnect the battery positive cable and negative cable.
6. Check for continuity between the B11 terminal and body ground.

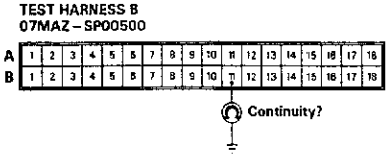


- If there is continuity, the SRS main harness is shorted. Replace the SRS main harness and recheck the voltages according to the chart on page 23-340.
- If there is no continuity, go to step 7.

(cont'd)

7. Check for continuity between the B11 terminal of Test Harness B (07MAZ-SP00500) and the No. 1 terminal of the SRS main harness 4-P connector.

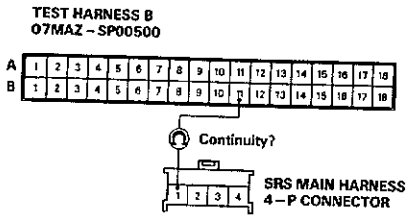


- If there is continuity, the SRS unit is faulty. Replace it and recheck the voltages according to the chart on page 23-340.
- If there is no continuity, there is an open in the SRS main harness. Replace the SRS main harness and recheck the voltages according to the chart on page 23-340.

8. Reconnect the SRS main harness 4-P connector to the main wire harness. Disconnect the dashboard wire harness 16-P connector from the gauge assembly.

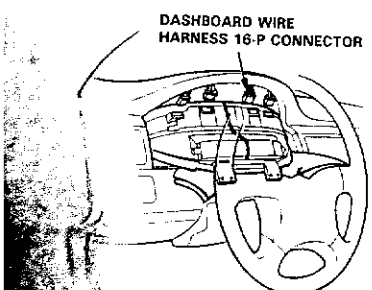


9. Turn the ignition switch ON and wait for six seconds. Measure the voltage between the No. 12 terminal and body ground.

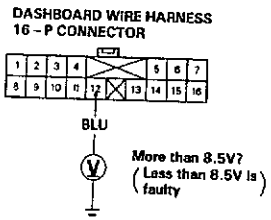


View from terminal side.

- If voltage is more than 8.5 V, the SRS indicator circuit is faulty (in the gauge assembly). Replace the SRS indicator assembly and recheck the voltages according to the chart on page 23-340.
- If voltage is less than 8.5 V, the dashboard wire harness (or the main wire harness) is faulty. Replace it and recheck the voltages according to the chart on page 23-340.



**Poor ground at SRS unit or unit mounting bolts.**

NOTE: The radio may have a 5-digit coded theft protection circuit. Be sure to get the customer's code number before disconnecting the battery cables.

1. Before disconnecting any part of the SRS wire harness, install the short connector(s) (RED) on the airbag(s) (see page 23-330).

2. Connect Test Harness B (07MAZ-SP00500) between the SRS unit and SRS main harness 18-P connector.

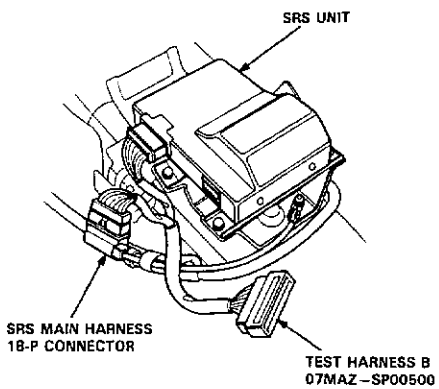


3. Check for continuity between the B5 terminal and body ground, and the B15 terminal and body ground.

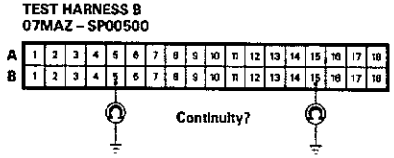


- If there is continuity at either terminal, the SRS unit is faulty. Replace it and recheck the voltages according to the chart on page 23-340.
- If there is no continuity at either terminal, the SRS unit ground, the SRS unit component grounds, or the SRS main harness is faulty. Check the grounds (check the SRS unit ground wire and mounting bolts) and, if necessary, replace the SRS main harness. Recheck the voltages according to the chart on page 23-340.

# Supplemental Restraint System (SRS)

## Airbag Assembly Replacement

**WARNING** **Store a removed airbag assembly with the pad surface up. If the airbag is improperly stored face down, accidental deployment could propel the unit with enough force to cause serious injury.**

**CAUTION:**

- **Do not install used SRS parts from another car. When repairing as SRS, use only new parts.**
- **Carefully inspect the airbag assembly before install it. Do not install an airbag assembly that shows signs of being dropped or improperly handled, such as dents, cracks or deformation.**
- **Always keep the short connector(s) (RED) on the airbag(s) when the harness is disconnected.**
- **Do not disassemble or tamper with the airbag assembly.**

NOTE: The radio may have a 5-digit coded theft protection circuit. Be sure to get the customer's code number before disconnecting the battery cables.

1. Disconnect the battery negative cable, then disconnect the positive cable.

2. Install the short connector(s) (RED) on the airbag side of the connector(s):

   **Driver's Side:**

   - Remove the glove box.
   - Disconnect the 3-P connector between the driver's airbag and cable reel, then install the short connector (RED) on the airbag side of the connector.

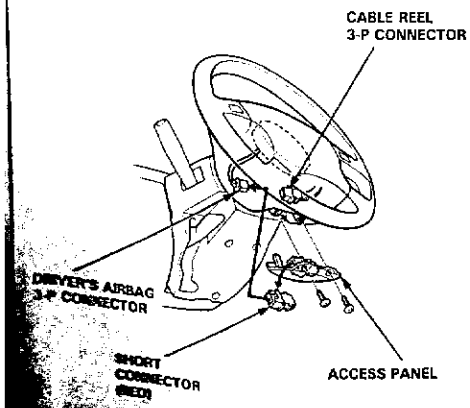


**Front Passenger's Side:**

- Remove the glove box.
- Disconnect the 3-P connector between the front passenger's airbag and SRS main harness, then install the short connector (RED) on the airbag side of the connector.

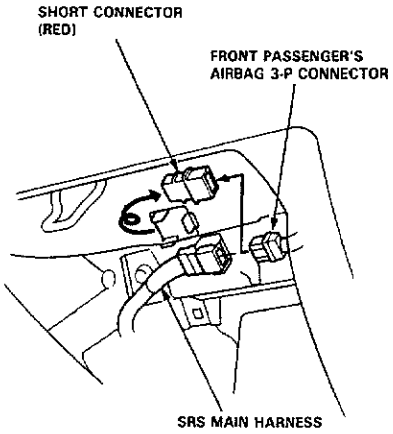


3. Remove the airbag(s).

   **Driver's Side:**

   - Remove the two TORX® bolts using a TORX® T30 bit, then remove the driver's airbag assembly.

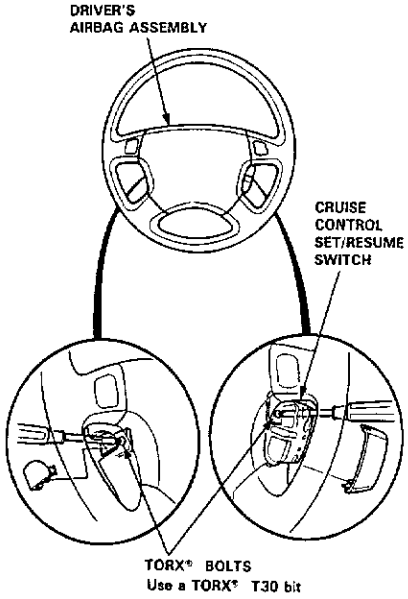


**Front Passenger's Side:**

- Remove the glove box, then remove the four mounting nuts from the bracket.
- Remove the bracket and one mounting nut from the front passenger's airbag assembly.

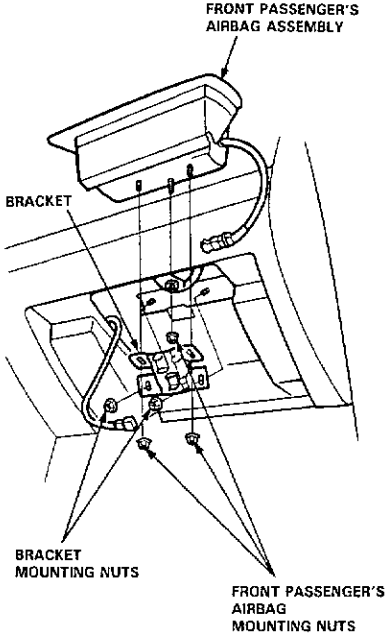


- Carefully lift the front passenger's airbag assembly out of the dashboard.

(cont'd)

**CAUTION: Be sure to install the SRS wiring so that it is not pinched or interfering with other car parts.**

4. Install the new airbag(s).

   **Driver's Side:** Place the driver's airbag assembly in the steering wheel, and secure it with new TORX® bolts.

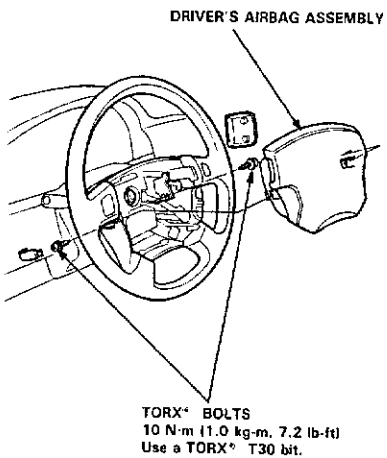


**Front Passenger's Side:**

- Place the front passenger's airbag assembly in the dashboard.
- Press the airbag assembly downwards and turn the adjusting nuts until they touch the lower part of the airbag assembly.
- Tighten the middle airbag mounting nut, then install the bracket and four mounting nuts.
- Tighten the two outer airbag mounting nuts, then tighten the two bracket mounting nuts.

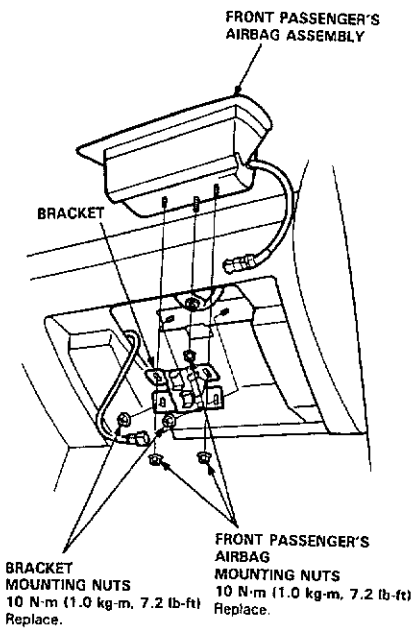






5. Remove and properly store the short connector(s), then reconnect the airbag connector(s).

   **Front passenger's Side:**

   - Attach the short connector (RED) to the connector holder, then reinstall the glove box.

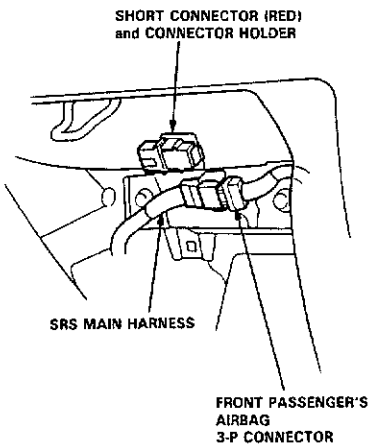


**Driver's Side:**

- Remove the short connector (RED) from the driver's airbag connector, then connect the airbag 3-P connector to the cable reel 3-P connector.
- Attach the short connector (RED) to the access panel, then reinstall the panel on the steering wheel.

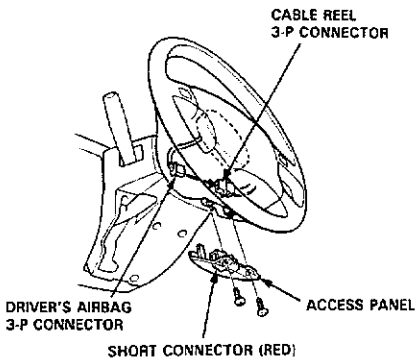


6. Connect the battery positive cable, then the negative cable.

7. After installing the airbag assembly, confirm proper system operation:

   - Turn the ignition ON (II): The instrument panel SRS indicator light should go on for about six seconds and then go off.
   - Make sure both horn buttons work.
   - Take a test drive and make sure the cruise control set/resume switch works.

8. Enter the code number to restore radio operation (see page 23-223).

# Supplemental Restraint System (SRS)

## – Airbag Assembly Disposal

Before scrapping any airbag(s) (including one in a whole car to be scrapped) the airbag must be deployed. If the car is still within the warranty period, before you deploy the airbag, the Acura District Service Manager must give approval and/or special instructions.
Only after an airbag has been deployed (as the result of vehicle collision, for example) it can be scrapped.
If the airbag(s) appears intact (not deployed) treat it with extreme caution.
Follow this procedure:

**Deploying the Airbag(s): In-Car**

NOTE: If an SRS car is to be entirely scrapped, its airbag(s) should be deployed while still in the car.
The airbag(s) should not be considered as salvageable part and should never be installed in another car.

**WARNING Confirm that the airbag assembly is securely mounted; otherwise severe personal injury could result during deployment.**

1. Disconnect both the negative cable and positive cable from the battery.

2. Confirm that the special tool is functioning properly by following the check procedure on the label of the tool set box, or on page 23-359

**Driver's Airbag:**

3. Remove the access panel, then disconnect the 3-P connector between the driver's airbag and cable reel.

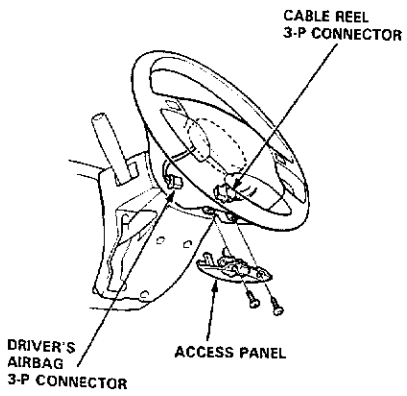


**Front Passenger's Airbag:**

4. Remove the glove box, then disconnect the 3-P connector between the front passenger's airbag and SRS main harness.

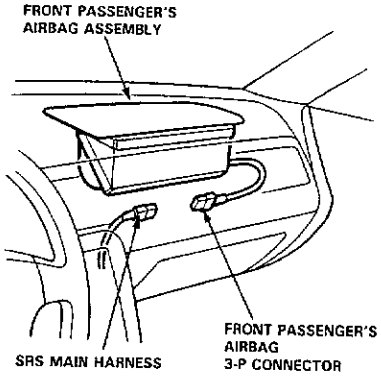


5. Cut off the airbag connector, strip the ends of the airbag, wires, and connect the special tool alligator clips to the bare wires. Place the special tool approximately thirty feet (10 m) away from the airbag.

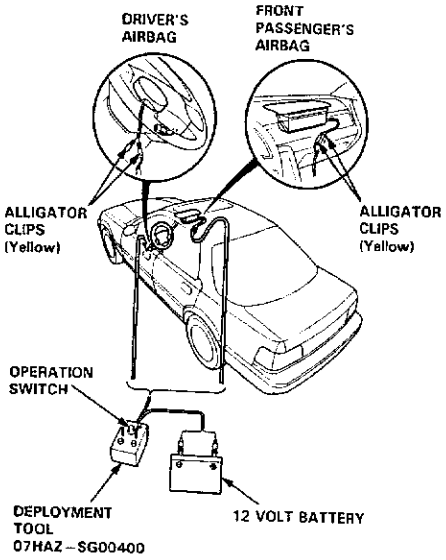






6. Connect a 12 volt battery to the tool:
   - If the green light on the tool goes on, the airbag igniter circuit is defective and cannot deploy the bag. Go to Damaged Airbag Special Procedure.
   - If the red light on the tool goes on, the airbag is ready to be deployed.

7. Push the tool's deployment switch. The airbag should deploy (deployment is both highly audible and visible—a loud noise and rapid inflation of the bag, followed by slow deflation).

   - If audible/visible deployment happens and the green light on the tool goes on, continue with this procedure.
   - If the airbag doesn't deploy, yet the green light goes ON, its igniter is defective.
     Go to Damaged Airbag Special Procedure.

**WARNING During deployment, the airbag assembly can become hot enough to burn you.**
**Wait thirty minutes after deployment before touching the assembly.**

8. Dispose of the complete airbag assembly. No part of it can be reused. Place it in a sturdy plastic bag and seal it securely.

**CAUTION:**
- **Wear a face shield and gloves when handling a deployed airbag.**
- **Wash your hands and rinse them well with water after handling a deployed airbag.**

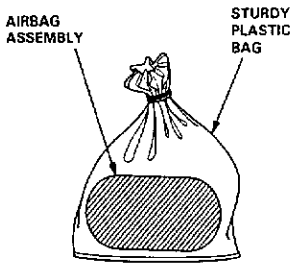


**Deploying the Airbag: Out-of-car.**

NOTE: If an intact airbag assembly has been removed from a scrapped car or has been found defective or damaged during transit, storage, or service, it should be deployed as follows:

**WARNING Position the airbag assembly face up, outdoors on flat ground at least thirty feet (10 m) from any obstacles or people.**

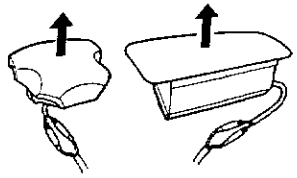

1. Confirm that the special tool is functioning properly by following the check procedure on this page or on the tool box label.
2. Remove the short connector from the airbag connector.
3. Follow steps 5, 6, 7 and 8 of the in-car deployment procedure.

**Damaged Airbag Special Procedure.**

**WARNING If an airbag cannot be deployed, it should not be treated as normal scrap; it should still be considered a potentially explosive device that can cause serious injury.**

1. If installed in a car, follow the removal procedure on page 23-354.

2. In all cases, make sure a short connector is properly installed on the airbag connector.

3. Package the airbag in exactly the same packaging that the new replacement part came in.

4. Mark the outside of the box "DAMAGED AIRBAG NOT DEPLOYED" so it does not get confused with your parts stock.

5. Contact your Acura District Service Manager for how and where to return it for disposal.

**Deployment Tool: Check Procedure.**

1. Connect the yellow clips to both switch protector handles on the tool; connect the tool to a battery.

2. Push the operation switch: green means tool is OK; red means tool is faulty.

3. Disconnect the battery and the yellow clips.

## Cable Reel Replacement

**WARNING** Store a removed airbag assembly with the pad surface up. If the airbag is improperly stored face down, accidental deployment could propel the unit with enough force to cause serious injury.

CAUTION:
- Carefully inspect the airbag assembly before installing it. Do not install an airbag assembly that shows signs of being dropped or improperly handled, such as dents, cracks or deformation.
- Always keep the short connector(s) on the airbag(s) when the harness is disconnected.
- Do not disassemble or tamper with any airbag assembly.

NOTE: The radio may have a 5-digit coded theft protection circuit. Be sure to get the customer's code number before disconnecting the battery cable.

1. Disconnect the battery negative cable and then the positive cable.
2. Make sure the wheels are facing straight ahead.
3. Remove the dashboard lower cover and knee bolster.

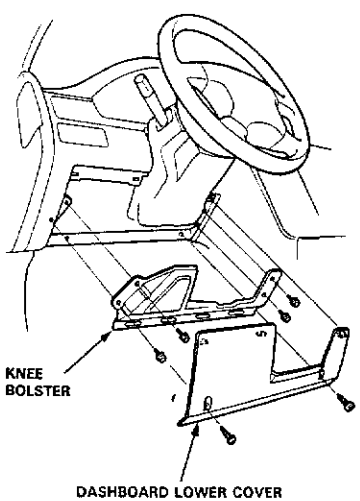


4. Install the short connector(s) on the airbag(s).

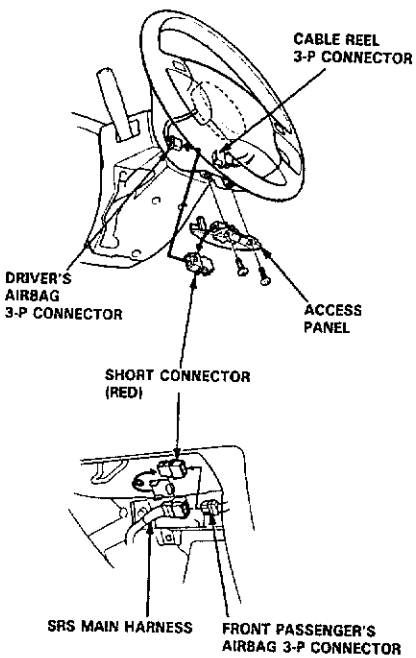


5. Remove the driver's airbag assembly from the steering wheel (two T30 TORX® bolts), then remove the steering wheel nut.

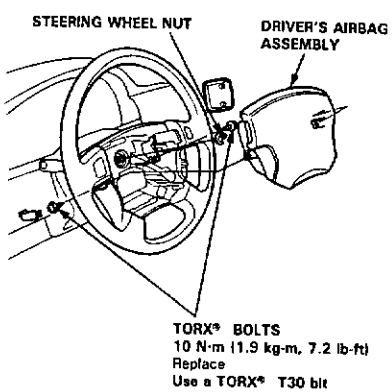






6. Disconnect the connectors from the horn and cruise control set/resume switch connectors, then remove the cable reel 3-P connector from its clip.

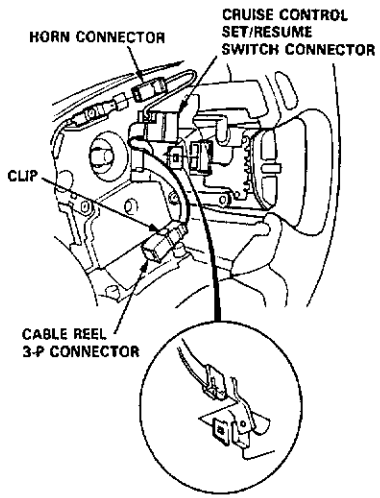


7. Remove the steering wheel from the column.
8. Remove the upper and lower column covers.

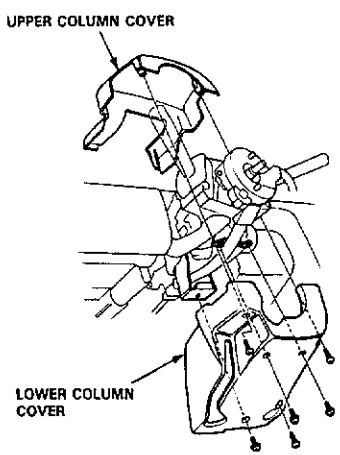


9. Disconnect the 6-P connector between the cable ree and SRS main harness, then remove the connecto holder from the steering column.

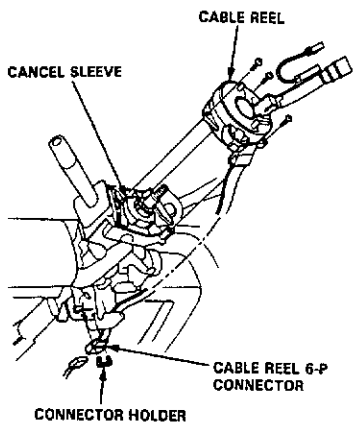


10. Remove the cable reel from the column.

(cont'd

## Cable Reel Replacement (cont'd)

**CAUTION:**
- **Before installing the steering wheel, the front wheels should be aligned straight ahead.**
- **Be sure to install the harness wires so that they are not pinched or interfering with other car parts.**
- **After reassembly, confirm that the wheels are still straight ahead and that the steering wheel spoke angle is correct (road test). If minor spoke angle adjustment is necessary, do so only by adjusting the tie-rods, not by removing and repositioning the steering wheel.**

11. Align the cancel sleeve grooves with the cable reel projections.

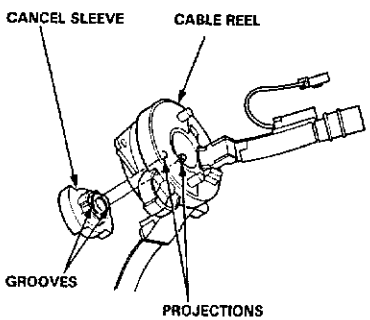


12. Carefully install the cable reel on the steering column shaft. Then attach the 6-P connector holder to the steering column.

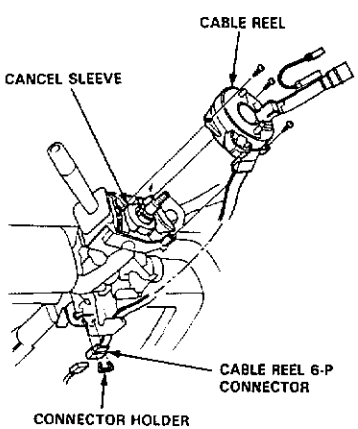


13. Install the steering column upper and lower covers.

14. Center the cable reel. Do this by first rotating the cable reel clockwise until it stops. Then rotate it counterclockwise (approximately two turns) until:
    - The yellow gear tooth lines up with the alignment mark on the cover.
    - The arrow mark on the cable reel label points straight up.

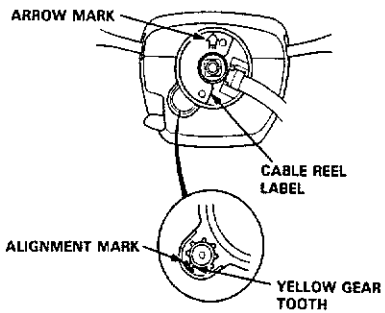


15. Install the steering wheel and attach the cable reel 3-P connector to the clip.

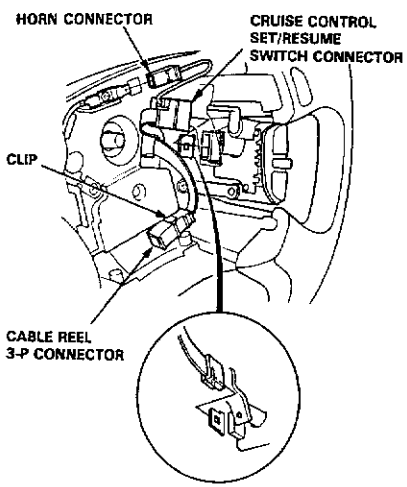


16. Connect the horn connector and cruise control set/resume switch connector.





17. Install the steering wheel nut.

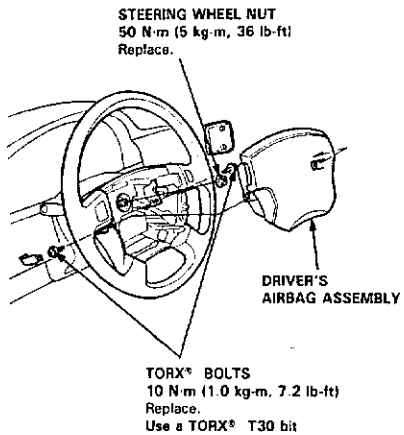


18. Install the driver's airbag assembly.

19. Connect the cable reel 6-P connector to the SRS main harness, then install the knee bolster, and dashboard lower cover.

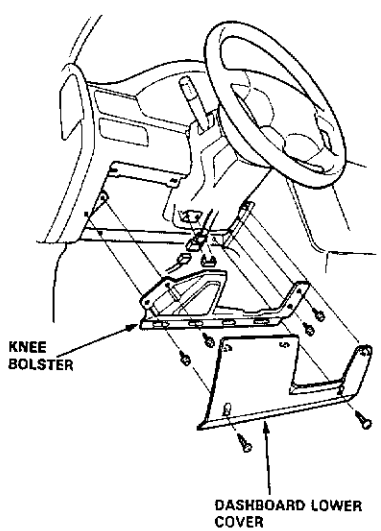


20. Remove and properly store the short connector(s) (RED), then reconnect the airbag connector(s) (and reinstall the access panel).

21. Reconnect the battery positive cable, then the negative cable.

22. After installing the cable reel, confirm proper system operation:
    - Turn the ignition ON (II); the instrument panel SRS indicator light should go on for about six seconds and then go off.
    - Make sure both horn buttons work.
    - Make sure the headlight and wiper switches work.
    - Go for a test drive and make sure the cruise control set/resume switch work.
    - Rotate the steering wheel counterclockwise to make sure the yellow gear tooth lines up with the alignment mark on the cover.

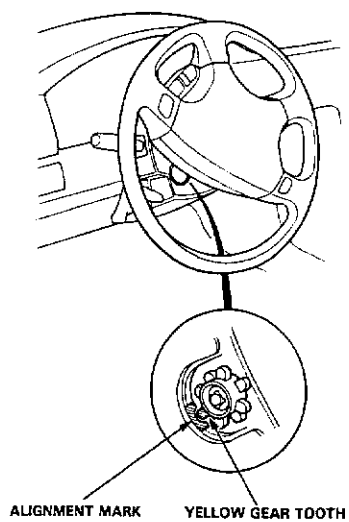


23. Enter the code number to restore radio operation (see page 23-223).

## Dash Sensor Replacement

**CAUTION:**
- **Do not damage the sensor wiring.**
- **Do not install used SRS parts from another car. When repairing an SRS, use only new parts.**
- **Replace a sensor if it is dented, cracked, or deformed.**

NOTE: The radio may have a 5-digit coded theft protection circuit. Be sure to get the customer's code number before disconnecting the battery cable.

1. Disconnect the battery negative cable, then the positive cable.

2. Install the short connector(s) on the airbag(s).

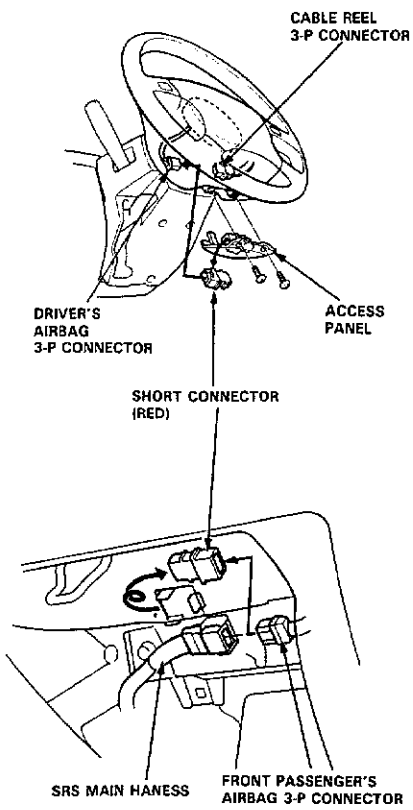


3. Left Dash Sensor:
   Remove the footrest and left door sill molding, then pull the carpet back, and remove the dash sensor protector.

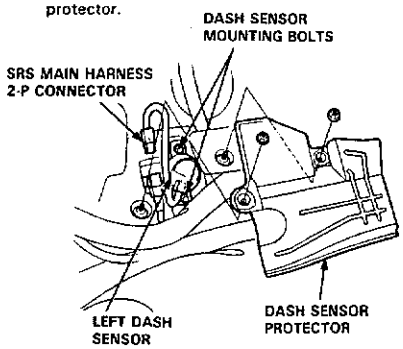


4. Right Dash Sensor:
   Remove the right door sill molding and pull back the carpet. Remove the ECM.

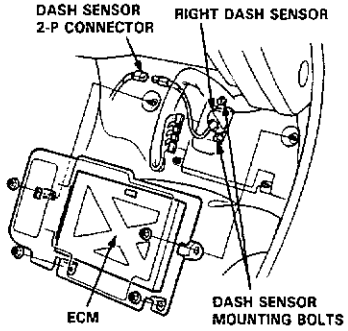


5. Remove the two mounting bolts, then remove the left or right dash sensor.

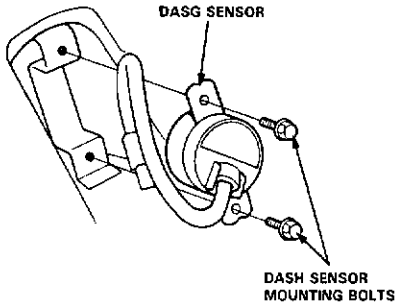






**CAUTION:**
- **Be sure to install the harness wires so they are not pinched or interfering with other car parts.**
- **Carefully inspect the new dash sensor(s) for signs of being dropped or improperly handled, such as dents, cracks or deformation.**
- **For the SRS to function properly, the right and left sensors must be installed on the proper sides.**

6. Install the sensor securely.

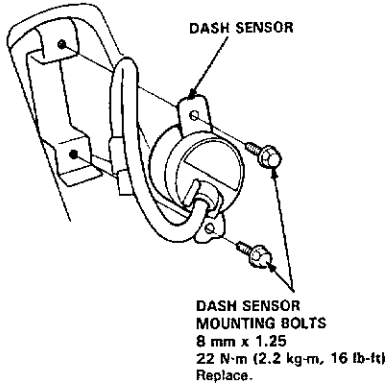


7. Reinstall all other removed parts.

8. Remove and properly store the short connector(s) (RED), then reconnect the airbag connector(s). Reinstall the access panel and glove box.

9. Reconnect the battery positive cable, then the negative cable.

10. After installing the dash sensor, confirm proper system operation: Turn the ignition ON (II); the instrument panel SRS indicator light should go on for about six seconds and then go off.

11. Enter the code number to restore radio operation (see page 23-223).

## SRS Unit Replacement

**CAUTION:**
- **Before disconnecting any part of the SRS wire harness, install the short connector(s) (RED) on the airbag(s).**
- **Do not damage the SRS unit terminals or connectors.**
- **Do not disassemble the SRS unit; it has no serviceable parts.**
- **Store the SRS unit in a clean, dry area.**
- **Do not use any SRS unit which has been subjected to water damage or shows signs of being dropped or improperly handled, such as dents, cracks or deformation.**

NOTE: The radio may have a 5-digit coded theft protection circuit. Be sure to get the customer's code number before disconnecting the battery cable.

1. Disconnect the battery negative cable, then the positive cable.
2. Install the short connector(s) on the airbag(s) (see page 23-330).
3. Remove the center console.
4. Remove the heater control panel and radio panel assembly.

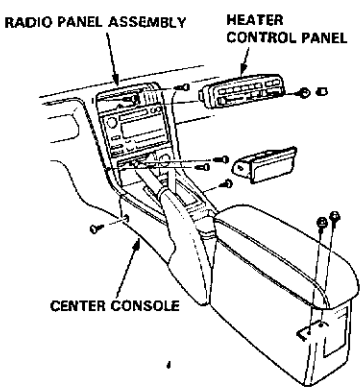


5. Disconnect the SRS main harness 18-P connector from the SRS unit.

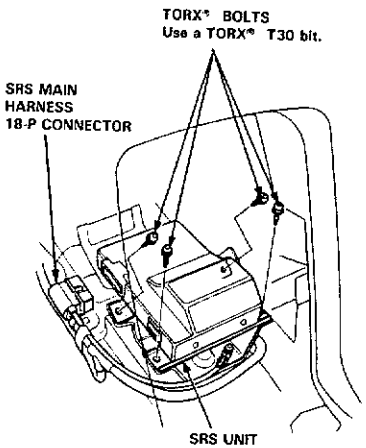


6. Remove the four SRS unit TORX® bolts, then pull the SRS unit out of the dashboard.





**CAUTION: Be sure to install the SRS wiring so that it is not pinched or interfering with other car parts.**

7. Install the new SRS unit.

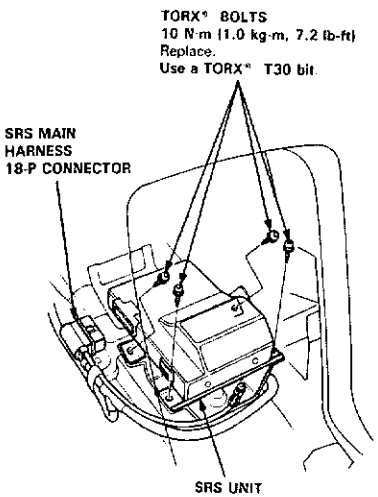


8. Connect the SRS main harness 18-P connector to the SRS unit; push it into position until it clicks.
9. Install the radio panel assembly and heater control panel, then install the center console.

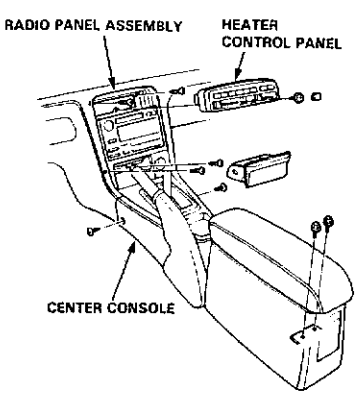


10. Remove and properly store the short connector(s), then reconnect the airbag connector(s). Reinstall the access panel and glove box.
11. Reconnect the battery positive cable, then the negative cable.
12. After installing the SRS unit, confirm proper system operation:
    - Turn the ignition ON (II); the instrument panel SRS light should go on for about six seconds and then go off.
    - Make sure the climate control system work.
    - Make sure the cigarette lighter work.
13. Enter the code number to restore radio operation (see page 23-223).

# Wiring Diagrams

## Index


ABS ..... 14
Air Conditioning ..... 17
Automatic Transmission System ..... 15
Battery ..... 1
Charging System ..... 1
Cigarette Lighter ..... 8
Clock ..... 8
Cruise Control System ..... 13
Fan control System ..... 17
Fuel Injection System ..... 16
Gauges ..... 2
Heater Control System ..... 17
Horns ..... 8
Ignition Switch ..... 1
Ignition System ..... 1
Indicators
- A/T gear position indicator ..... 3
- Safety Indicator ..... 3

Integrated Control Unit ..... 4
Interlock System ..... 3
Key-in Reminder System ..... 4
Lights-on Reminder System ..... 4
Lights, Exterior
- Back-up Lights ..... 8
- Brake Lights ..... 9
- Front Side Marker Lights ..... 4
- Daytime Running Lights (Canada) ..... 6
- Hazard Warning Lights ..... 9
- Headlights ..... 5, 6
- License Plate Lights ..... 7
- Taillights ..... 7
- Turn Signal Lights ..... 9

Lights, Interior
- Ashtray Light ..... 8
- Ceiling Lights ..... 8
- Courtesy Lights ..... 8
- Dash Lights Brightness Control ..... 7
- Glove Box Light ..... 7
- Ignition Key Light ..... 4
- Trunk Light ..... 8
- Vanity Mirror Lights ..... 7
- Lighting System ..... 5, 6

Moonroof ..... 11
Power Door Locks ..... 11
Power Mirror ..... 11
Power Seat ..... 13
Power Window ..... 12
Rear Window Defogger ..... 9
Seat Heater (Canada) ..... 14
Security Alarm System ..... 18
Side Marker/Turn Signal/
- Hazard Flasher System ..... 9

Starting System ..... 1
Stereo Sound System ..... 10
Supplemental Restraint System (SRS) ..... 18
Windshield Washer ..... 12
Windshield Wiper ..... 12


## NOTES